aira®

VALVE AUTOMATION
ISO 9001 CO.

Your Solution Partner in
Industrial
Valve Automation...

Catalogue - 2015

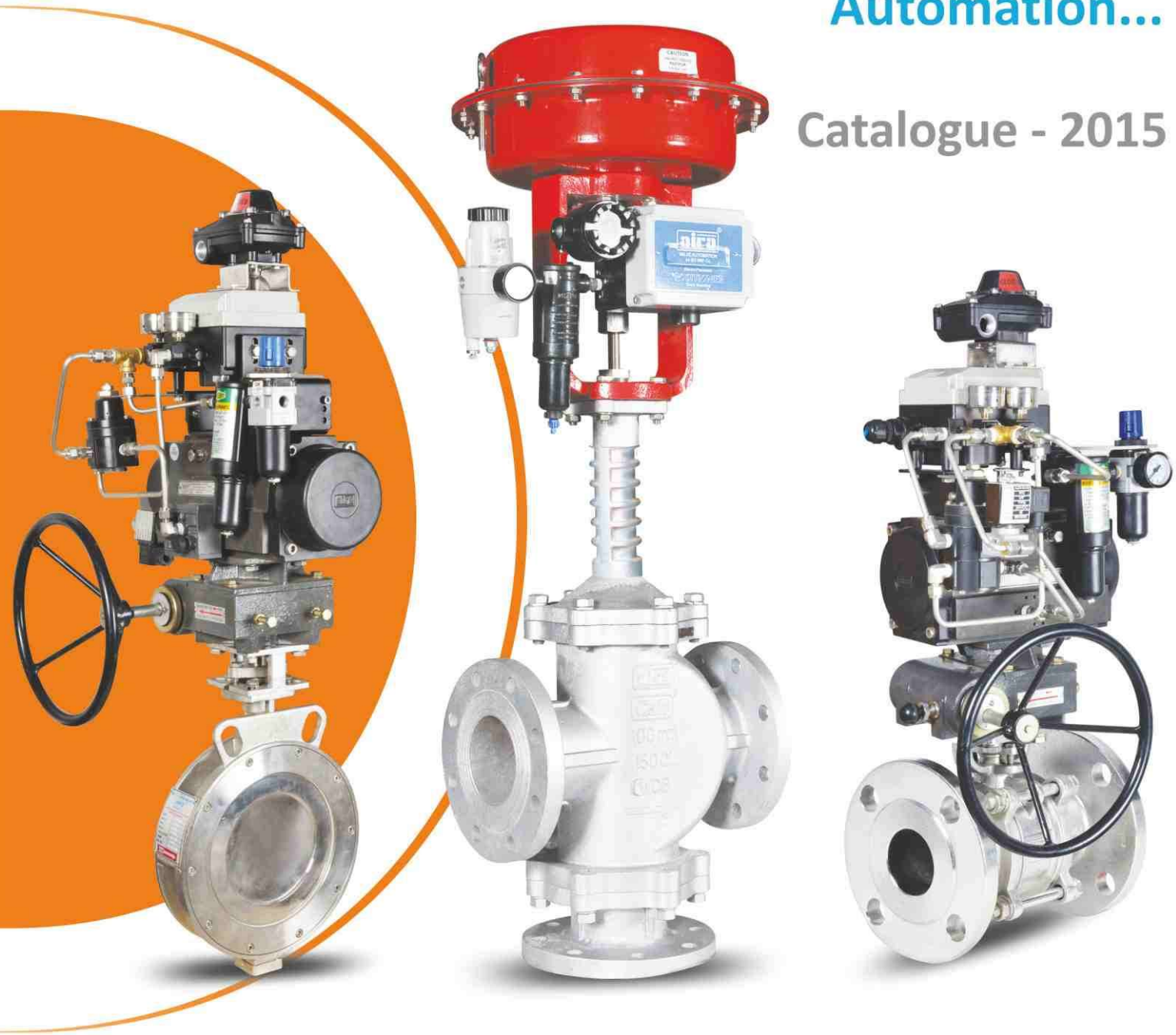

Mfg. & Mkt by

aira Euro automation pvt. ltd.

ISO 9001 : 2008 Certified Co.

INDIA

ABOUT US

aira
VALVE AUTOMATION
ISO 9001 CO.

We **"aira *Euro* automation pvt. ltd."** - accredited with ISO 9001, from BVQI - LONDON, the Indian valve manufacturer over 20 years' experience supplying the global industry of all kind of industrial automated valves of **aira *Euro* automation pvt. ltd.** make in the small sector.

We manufacture Quality Valves of almost all types for a wide spectrum of users in the Process & Chemical, Refineries & Petrochemicals, Fertilizers, Drugs & Pharmaceuticals, Thermal Power Stations, Nuclear & Atomic Power Stations, Textiles, Dyes & Intermediates, Paints & Varnishes, Sugar, Breweries & Distilleries, Soaps & Detergents, Steel Plants, Food & Oil Industry, Solvent Extraction Plants, Sewage, Effluent & Water Treatment, Cooling Water, Ship Yards and Marine Management, Water Works, Pulp & Paper, LPG Bottling Plants, Onshore & Offshore platforms, Slurry & Ash handling.

With a view of enhancing our customers' preference of having a ' ONE STOP SHOP', **aira** has constantly worked on enhancing its product profile. Within each business, we have a dedicated team of professionals totally focused on supplying their position comprehensive market. Our factory is guided by a group of experienced workforce with wide experience in their scope. We had prepared express strides in knowledge and act and are nowadays accepted by our respected clients as the most consistent 'ONE STOP SHOP' for their flexible requirement of Automated Valves. Their continuous support bears ample acknowledgment for the confidence reposed in **aira *Euro* automation pvt. ltd.** We are passionate about manufacturing automated - pneumatic operated valves - solenoid valves - continuously improving what we do and how we do it. We strive to build strong partnerships with our customers, suppliers, agents and distributors.

Valve manufacturer
over 20 years' experience
In Valve Automations...
with ISO 9001, from BVQI - LONDON

Quality policy

aira®
VALVE AUTOMATION
ISO 9001 CO.

The Management of **aira** *Euro* **automation pvt. ltd** is committed to quality and continual improvement in all areas of the organization by providing adequate infrastructure & resources at all level of the organization.

We will work as a team and with positive attitude. Every employee will maintain continual improvement of him self, his work processes, Quality Management System & resources (Men, Machine, Equipment, Materials, Tools, Instrument, Methods and Software etc.). Doing this way, everyone will become efficient of individual, divisional and corporate objectives efficiently, effectively and thus all our stake holders will always be satisfied.

Each employee will fulfill internal customers' and suppliers' needs related to their work satisfactorily. They will also maintain warm relationship with each other. Such behavior will keep the QMS Live & upgraded. Also that will help us in the improvement of quality of product customer satisfaction and strengthen the team work. Each and every employee will not allow quality to take second place behind cost or delivery schedule. All employees have the right to question their supervisor's decision or action if they feel that quality is being compromised. Management allow him to do so and perform his duty. If required he is also allowed to draw the attention of M.D. in such cases.

AEPL's management is committed to the health and safety of employees in relation to the company's business operations. We want to be preferred organization for all our stake holders (Persons & Institute) by following the above policy.

Committed to

Satisfy customers by manufacturing and supplying the reliable products

This Will be achieved

Complying and reviewing Quality Management System for continual improvement Providing earliest response to the customer's requirement. Effective cost management at every level Using quality input through efficient purchasing and inventory management. Efficient utilization of resources. Providing training to the people at the required level.

BUREAU VERITAS
Certification

AIRA EURO AUTOMATION PVT. LTD.

aira

PLOT NO.123 – 124, AIRA ESTATE, BEHIND SECURITY ESTATE, NEAR KASHIRAM TEXTILE MILL, NAROL ROAD, AHMEDABAD – 382 405, GUJARAT, INDIA

Bureau Veritas Certification certify that the Management System of the above organization has been audited and found to be in accordance with the requirements of the management system standard detailed below

Standard

ISO 9001:2008

Scope of certification

Design, Manufacture & Dispatch of Actuators, Ball Valves, Butterfly Valves, Control Valves, Pressure Reducing Valves, Electro-Pneumatic Assemblies, Solenoid Valves, Valves Actuation & Automation Products, Solenoid Coils, Limit Switches and Positioners.

Certification cycle start date: **28 January 2014**

Subject to the continued satisfactory operation of the organization's Management System, this certificate expires on: **27 January 2017**

Original certification date: **28 January 2002**

Certificate No. IND13.9113U Version : 1 Revision date: **19 December 2013**

Certification Authority
RAMESH KOREGAVE
General Manager

UKAS MANAGEMENT SYSTEMS
008

Certification body address: Brandon House, 180 Borough High Street, London SE1 1LB, United Kingdom

Local office: 'Manyah Centre' 8th Floor, Kulasekar Marsah Marg, Opp. Ansa Industrial Estate, Off Sakki Vihar Road, Andheri (East), Mumbai – 400 072, India

Further clarifications regarding the scope of this certificate and the applicability of the management system requirements may be obtained by consulting the organization. To check this certificate validity please call **+91 22 6695 6300**.

Approvals

aira
VALVE AUTOMATION
ISO 9001 CO.

Approvals

TDS, SGS, MECON, LLOYDS, PDIL, RITES, ONGC, BVIS,UHDE, BHEL, NPCIL, BARC, SAIL, Indian Navy & many more.

We have always kept our Design & Development Department on their toes, Even when a products has been positively accepted in the market, We have made changes for the better instead of resting on our laurels. Also we have full flanged in house flow testing facility.

Organisation Bellief

"Customer Is The Top Priority" Continuous job training to it's employees and human resource development strengths have given a loyal, trained workforce with grate motivation.
We have such a network of service and sales operations by qualified engineers and marketing personals, by which the nationwide requirements are being fulfilled.

Reputation

Clint's satisfaction with quality, fast action, rates, pre and after sales services.

Aim

To provide the most economic and quality product under the latest international manufacturing standards.

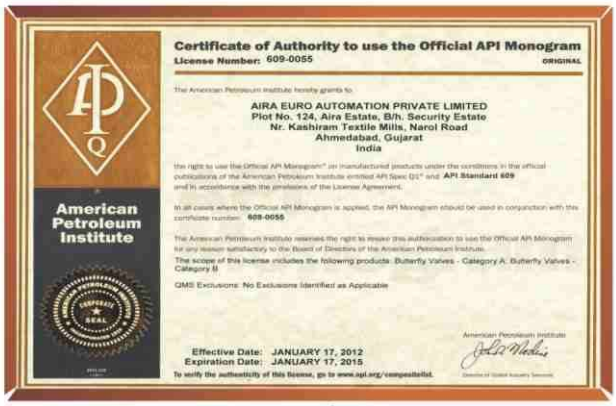

Certificate of Authority to use the Official API Monogram
License Number: 609-0055
ORIGINAL

The American Petroleum Institute hereby grants to

AIRA EURO AUTOMATION PRIVATE LIMITED
Plot No. 124, Aira Estate, B/h. Security Estate
Nr. Kashiram Textile Mills, Narol Road
Ahmedabad, Gujarat
India

the right to use the Official API Monogram® on manufactured products under the conditions in the official publications of the American Petroleum Institute entitled API Spec Q1® and API Standard 609 and in accordance with the provisions of the License Agreement.

In all cases where the Official API Monogram is applied, the API Monogram should be used in conjunction with this certificate number: 609-0055

The American Petroleum Institute reserves the right to revoke this authorization to use the Official API Monogram for any reason satisfactory to the Board of Directors of the American Petroleum Institute.

The scope of this license includes the following products: Butterfly Valves - Category A; Butterfly Valves - Category B

QMS Exclusions: No Exclusions Identified as Applicable

American Petroleum Institute
Effective Date: JANUARY 17, 2012
Expiration Date: JANUARY 17, 2015
To verify the authenticity of this license, go to www.api.org/compositelist.

API Certificate

CE Actuator

CE Actuator

Design Registered

Fire Safe

Fire Safe

Fire Safe

VALVE AUTOMATION
ISO 9001 CO.

QUALITY IS OUR PASSION

QUALITY IS OUR BUSINESS


भारतीय मानक ब्यूरो
BUREAU OF INDIAN STANDARDS

REGISTERED A/D

Dated : 14 Mar 2012

Subject: Grant of ISI Certification Marks Licence No. CM/L-3812155 as per IS/IEC 60079 - 1 : 2007

AIRA EURO AUTOMATION PVT LTD,
PLOT NO 124, AIRA ESTATE, B/H SECURITY ESTATE, NEAR KASHIRAM TEXTILE MILL
NAROL ROAD,
AHMEDABAD
Distt : Ahmedabad
Gujarat
382403
Dear Sir,

With reference to your application, we are pleased to inform you that it has been decided to grant you a licence to use the Standard Mark in respect of the following:

Product: **Explosive Atmospheres Part 1 Equipment Protection by Flameproof Enclosures "d"** (S.No : **IS/IEC 60079 -1 : 2007**

Type/Size/Grade/Variety covered under licence:
6 varieties of Flameproof Enclosures "d" as per IS/IEC 60079-1:2007 as per annexure

2.The number assigned to this licence is CM/L- 3812155 which has been made operative from 12/03/2012 and is valid upto 11/03/2015. The licence number should invariably be referred to in your future correspondence.

3.According to sub regulation (2) of Regulation 8 of Bureau of Indian Standards (Certification) Regulation, 1988, the licence fee of Rs.1000/- and the marking fee of Rs. 20206.00as stipulated in the Second Schedule of this licence is payable by you with effect from 12/03/2012 for the period of validity of the licence.

Service tax @ 10.3 % as applicable shall also be charged.

4.Minimum marking fee stipulated therein is payable by you regardless of whether you actually mark your product or not with the Standard Mark. Our Receipt No. 7210834 dated 13/03/2012for Rs. 23384.00for the licence fee(Rs.1000/-) and the minimum marking fee is enclosed/sent separately.
5. This advance minimum marking fee will be carried over to the next year on every renewal. The actual marking fee calculated on the unit rate on the production marked or the minimum marking fee, whichever is higher shall be payable by you at the time of renewal.

HEAD OFFICE: MANAK BHAVAN, 9 BAHADUR SHAH ZAFAR MARG, NEW DELHI - 110002

BIS / ISI Certificate


ANNEXURE TO GRANT OF LICENCE LETTER

CM/L-3812155

(S/IEC 60079-1:2007)

SNO	PRODUCT NAME	MODEL NO	ZONE AND GAS GROUP	TEST CERTIFICATE NO. AND DRAWING NO.
1	FLP/WP ENCLOSURE FOR SOLENOID COIL ASSEMBLY RATED AT 230 V AC	FLP-3600	ZONE 1&2 AND GAS GROUP IIC	CIMFR/TC/P/101 (DT 21.04.2011) DRG. NO. FLP-3600-GA-01-230
2	FLP/WP ENCLOSURE FOR SOLENOID COIL ASSEMBLY RATED AT 110 V AC	FLP-3600	ZONE 1&2 AND GAS GROUP IIC	CIMFR/TC/P/102 (DT 21.04.2011) DRG. NO. FLP-3600-GA-01-110
3	FLP/WP ENCLOSURE FOR SOLENOID COIL ASSEMBLY RATED AT 24 V DC	FLP-3600	ZONE 1&2 AND GAS GROUP IIC	CIMFR/TC/P/103 (DT 21.04.2011) DRG. NO. FLP-3600-GA-01-24
4	FLP/WP ENCLOSURE FOR SOLENOID COIL ASSEMBLY RATED AT 230 V AC	FLP-4400	ZONE 1&2 AND GAS GROUP IIC	CIMFR/TC/P/104 (DT 21.04.2011) DRG. NO. FLP-4400-GA-01-230
5	FLP/WP E/P POSITIONER	AEP-1000-EN	ZONE 1&2 AND GAS GROUP IIC	CIMFR/TC/P/106 (DT 21.04.2011) DRG. NO. AEP-1000-EN-01
6	FLP/WP LIMIT SWITCH BOX	MLS-BX-FLP-01	ZONE 1&2 AND GAS GROUP IIC	CIMFR/TC/P/107 (DT 27.04.2011) DRG. NO. LSE-FLP-GA-01

BIS / ISI Certificate


केंद्रीय खनन एवं ईंधन अनुसंधान संस्थान

CENTRAL INSTITUTE OF MINING AND FUEL RESEARCH

SPEED POST/COURIER SERVICE

M/s. Aimsson Automation Pvt. Ltd.,
Plot No. 124, Aira Estate, B/h Security Estate,
Near Kashiram Textile Mills, Narol Road,
Ahmedabad - 382 405

Sub: Flameproof Testing as per IS/IEC 60079-1:2007 and weatherproof testing as per IS 12063:1987, IEC 60529:1989, IP-67, of your **Flameproof cum Weatherproof E/P Positioner**, in Cast Aluminium Alloy construction (0.3% Magnesium alloy) rated at 24V DC, 4-20mAmps designated by **Model No.: AEP-1000-EN**, for use in Zone 1 & 2 and Gas Group IIC atmosphere only.

- Report on (PROTOTYPE)

Your Ref. Appl. No.: AIRA-000 **Dated: 04/04/2011**

Dear Sir,

Please find enclosed the **Test Report (Prototype)** of the above sample submitted by you.

Charges of **Rs. 20,803/- (Rupees Twenty six thousand Eight hundred & Three only)** including applicable service charges involved towards the testing, (minus the advance deposit made by you).

Kindly arrange to collect the sample within 30 days from the date of receipt of this letter failing which CIMFR would dispose off the sample by public auction without any further NOTICE to you.

Kindly acknowledge receipt.

Thanking you,

Yours faithfully,

Encl: As above.
Prototype Test Report in **Triplicate**
Copy to: 1. Head, Flame & Explosion Lab.
2. BIS Section

G. M. PRASAD
HEAD OF THE DEPARTMENT
TESTING CELL

CIMFR Certificate


euroTECH

Certificate of Conformity

We confirm that the technical documentation for the below mentioned product according to the Council Directives 2006/95/EC & 2004/108/EC

Solenoid Coil, Positioner Enclosure

Manufactured by company

AIRA EURO AUTOMATION PVT. LTD.

PLOT NO. 123-124, AIRA ESTATE, B/H SECURITY ESTATE, NR. KASHIRAM TEXTILE MILLS, NAROL ROAD, AHMEDABAD – 382 405, GUJARAT, INDIA

complies with the applicable essential requirements of the Directives 2006/95/EC & 2004/108/EC and the European Standards BS EN 60204-1:2006+A1:2008, BS EN 61000-6-1:2007, BS EN 61000-6-3:2007+A1:2011, BS EN 61000-3-2:2006+A2:2009 & BS EN 61000-3-3:2008.

The Eurotech Assessment and Certification Services Pvt. Ltd. has conducted with successful results the type examination of the certified product according to relevant parts of the above mentioned Harmonized European Standards.

The product description, documents, assessment procedures and evaluations of the examination are presented in the Technical Construction File (TCF).

This Certificate is issued under the following conditions:

1. It applies only to the above referenced set of products. The manufacturer is obligated to assure that all product of the respective model conform to the type assessed by this certificate.
2. The Certificate validity is conditioned by the positive results of the surveillance audits.
3. The Certificate remains valid until the manufacturing conditions, the quality systems or relevant legislation are changed but until the **June 18, 2015** at least.
4. After fulfilling the relevant EU legislation requirements, the manufacturer shall affix to each product of the above referenced models, CE Mark according to the following example.

CE

Certificate No. : ETLVD/2012/782
Issue Date : June 19, 2012
Expiry Date : June 18, 2015

Authorised Signatory

Eurotech Assessment and Certification Services Pvt. Ltd.

CE Certificate


euroTECH

Annexure to Certificate

No. ETLVD/2012/782

Issued for the company:

AIRA EURO AUTOMATION PVT. LTD.

PLOT NO. 123-124, AIRA ESTATE, B/H SECURITY ESTATE, NR. KASHIRAM TEXTILE MILLS, NAROL ROAD, AHMEDABAD – 382 405, GUJARAT, INDIA

List of the Products covered by the EC Certificate:

Product	Model No.
Solenoid Coil	1130
	2200
	3000
	3700
	3800
	4000
	4400
	4700
Positioner Enclosure	AEP-1000-EN

Certificate No. : ETLVD/2012/782
Issue Date : June 19, 2012
Expiry Date : June 18, 2015

Authorised Signatory

Eurotech Assessment and Certification Services Pvt. Ltd.

CE Certificate


euroTECH

Certificate of Conformity

We confirm that the technical documentation for the below mentioned product according to the Council Directives 2006/42/EC, 2006/95/EC & 2004/108/EC

Micro Limit Switch

Models: ML-S-BX-FLP-01, ML-S-BX-01, MML-S-BX-WP-01

Manufactured by company

AIRA EURO AUTOMATION PVT. LTD.

PLOT NO. 123-124, AIRA ESTATE, B/H SECURITY ESTATE, NR. KASHIRAM TEXTILE MILLS, NAROL ROAD, AHMEDABAD – 382 405, GUJARAT, INDIA

complies with the applicable essential requirements of the Directives 2006/42/EC, 2006/95/EC & 2004/108/EC and the European Standards BS EN 60204-1:2006+A1:2008, BS EN ISO 12100:2010, BS EN 61000-6-1:2007, BS EN 61000-6-3:2007+A1:2011, BS EN 61000-3-2:2006+A2:2009 & BS EN 61000-3-3:2008.

The Eurotech Assessment and Certification Services Pvt. Ltd. has conducted with successful results the type examination of the certified product according to relevant parts of the above mentioned Harmonized European Standards.

The product description, documents, assessment procedures and evaluations of the examination are presented in the Technical Construction File (TCF).

This Certificate is issued under the following conditions:

1. It applies only to the above referenced set of products. The manufacturer is obligated to assure that all product of the respective model conform to the type assessed by this certificate.
2. The Certificate validity is conditioned by the positive results of the surveillance audits.
3. The Certificate remains valid until the manufacturing conditions, the quality systems or relevant legislation are changed but until the **June 18, 2015** at least.
4. After fulfilling the relevant EU legislation requirements, the manufacturer shall affix to each product of the above referenced models, CE Mark according to the following example.

CE

Certificate No. : ETMD/2012/781
Issue Date : June 19, 2012
Expiry Date : June 18, 2015

Authorised Signatory

Eurotech Assessment and Certification Services Pvt. Ltd.

CE Certificate

aira®
VALVE AUTOMATION
ISO 9001 CO.

Company Profile

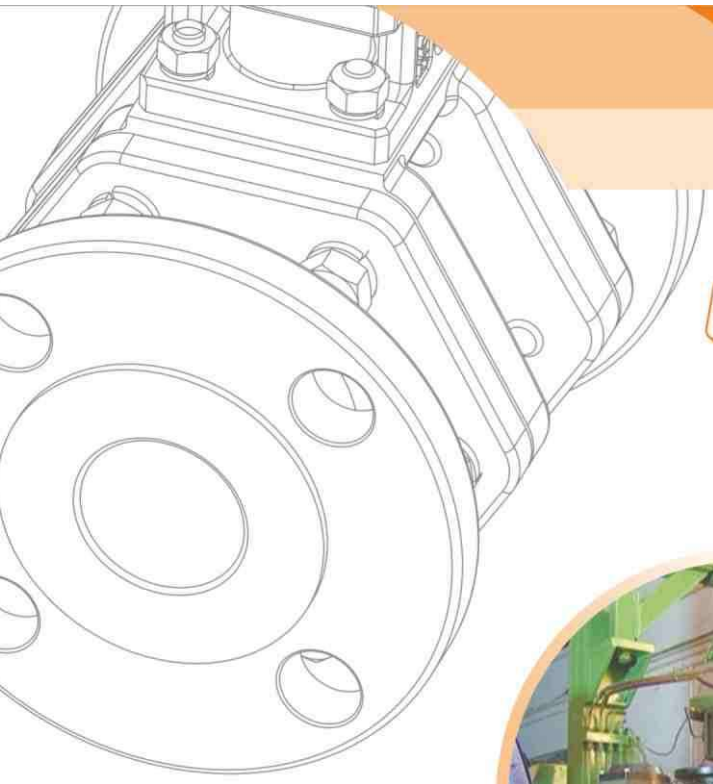

Company Profile

aira®
VALVE AUTOMATION
ISO 9001 CO.

aira
VALVE AUTOMATION
ISO 9001 CO.

Index

SERIES : A

PNEUMATIC ROTARY ACTUATOR
As Per ISO 5211

SERIES : B

PNEUMATIC ROTARY ACTUATOR OPERATED
2 WAY / 3 WAY / 4 WAY
BALL VALVE
S/E - F/E

SERIES : C

PNEUMATIC ROTARY ACTUATOR OPERATED
WAFER TYPE & DOUBLE FLANGE
BUTTERFLY VALVE

SERIES : D

PNEUMATIC DIAPHRAGM & CYLINDER OPERATED
CONTROL VALVE

SERIES : E

SOLENOID VALVE

SERIES : F

DRUM TYPE CONTROL VALVE

SERIES : G

ACCESSORIES

VALVE
AUTOMATION

Pneumatic Rotary Actuator

As Per ISO 5211

SERIES : A

aira®

VALVE AUTOMATION
ISO 9001 CO.

- Aluminium & Stainless Steel Body
- Namur Standard Mounting
- Single & Double Acting Scotch and Yoke Actuator
- Torque Upto 1,10,380 Nm available
- Rotation - 90° & 180° Avilable
- Normal Temperature -20° to 80 °C
  (High Temp. Upto 150 °C available)

CE IBR

Pneumatic
Rotary Actuator Double Acting
As Per ISO 5211

Catalogue No.
APL / 1076

aira
VALVE AUTOMATION
ISO 9001 CO.

"aira"

offers ISO 5211 Standard Pneumatic Actuator for all your 90° / 180° Valves & Dampers Automation Requirements

CE Approved

1. **Hard Anodized** Barrel / Body to Protect from Hazardous atmosphere & corrosion, which enhance life of actuator
2. **Namur Standard Pinion Top** (An International Standard) The pinion (shaft) top drilled and slotted for easy assembling of switch, positioners and other accessories.
3. **Namur pad for Solenoid Valve** (An International Standard) Air supply ports are Include On Body as per NAMUR standard to facilitate direct mounting of solenoid valve at actuator.
4. **ISO - 5211 Standard Mounting for Valve** (An International Standard) Double bottom driling for actuator to valve Assembling & centering. Designed for strength and easy mounting or interchangeability.
5. **ISO - 5211 Standard Pinion Bottom** (An International Standard) Bottom of the pinion (Shaft) as female key, double square hole for assembling on valves with square key stem and in line or turned to 45°. Designed for strength and sure-fix with stem
6. **Sliding Skates :** The innovation for replaceable sliding skates, between Pistons (Racks) and internal bore surface of the Actuator, just to avoid metal contact, which enhances the Actuator life
7. **Compact Design :** "aira" Actuators are designed as compact double acting which offers high torque values. Internal sliding surface, lapped and anodized for minimum friction and long life of actuator. .

General Features :

1. Opr. press : 60 to 115 psi
2. Temperature range : -20 °C to 90 °C
3. Air supply : Filtered, dry or lubricated
4. Ext. protection : Corrosion strength to 500 hours in salted fog

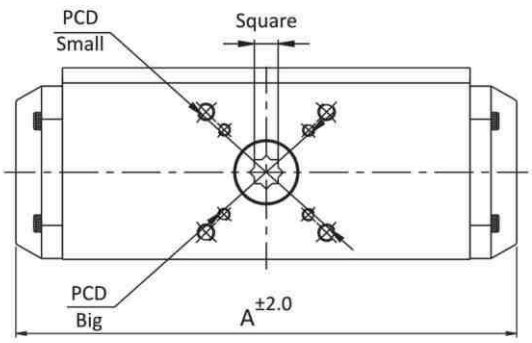

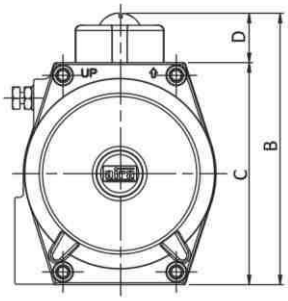

Dimensions : (All Dimensions are in mm)

Model	A	B	C	D	PCD SMALL	PCD BIG	SQUARE	WEIGHT (Approx) Kgs.	AIR CONSUMPTION In Liters
ARA - 49 - D	130	98	69.5	28.5	36	50	11X11	1.100	0.2
ARA - 50 - D	152.8	101.5	74	27.5	36	50	14X14	1.400	0.25
ARM - 63 - D	181.9	113.6	87.8	25.8	50	70	14X14	2.650	0.43
ARA - 75 - D	188	126.5	100	26.5	50	70	17X17	2.800	0.66
ARM - 83 - D	213	135.4	109.4	26	50	70	17X17	3.300	0.75
ARA - 90 - D	265.5	145.4	117	28.4	----	70	17X17	5.050	1.37
ARA - 110 - D	267	166	140	26	70	102	22X22	7.400	2.6
ARA - 127 - D	312	179	153	26	102	125	27X27	10.100	3.8
ARA - 140 - D	364	198	172	26	102	125	27X27	14	4.1
ARA - 160 - D	417	228	196	32	102	125	36X36	20.750	7.48
ARM - 190 - D	550.6	275.2	232.2	43	-----	140	36X36	32.600	10.03
ARA - 210 - D	563.6	292.3	253.1	39.2	-----	140	36X36	59	10.64
ARM - 240 - D	620	320.2	292.5	27.7	-----	165	46X46	65	On Request.
ARM - 270 - D	733.4	364.3	328.4	35.9	-----	165	46X46	83.500	On Request.
ARM - 300 - D	825	393.7	355.7	38	-----	165	46X46	109.500	On Request.
ARM - 350 - D	842.2	445.6	410.6	35	-----	165	46X46	147.600	On Request.
ARM - 400 - D	926.5	503.6	463.4	40.2	-----	165	55X55	310.500	On Request.

Note : Since, constant worldwide advancement in technology, we keep our rights reserved to make changes time to time in Technical specifications and Dimensions without prior notice.

Pub. on: January, 2015 (Rev.-01)

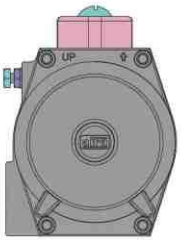

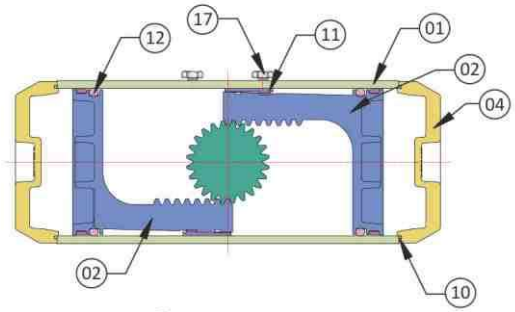

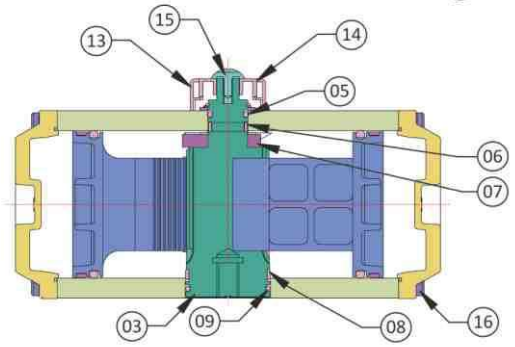

Parts List

NO	Name	Material.	Qty
1	Body	Aluminium Alloy with Hard Anodised	01
2	Piston	Aluminium Alloy	02
3	Shaft	EN 8 with Hard Chrome Plated	01
4	End Cover	Aluminium Alloy with Powder Coated	02
5	Shaft UP 'O' Ring	NBR	01
6	Shaft UP Guide	Delrin	01
7	Adaptor	EN 8 with Hard Chrome Plated	01
8	Shaft Low Guide	Delrin	01
9	Shaft Low 'O' Ring	NBR	01
10	'O' Ring For End Cap	NBR	02
11	Piston Skates	Delrin	02
12	'O' Ring For Piston	NBR	02
13	Indicator	Nylon	01
14	Indicator Strip	Nylon	04
15	Indicator Screw	Nylon + S. S.	01
16	L. N. Bolt For End Cap	S. S.	08
17	Adjustable Bolt	S. S.	02

"aira" ACTUATOR SELECTION CHART

Selection of Double Acting Actuator

- Conclude your required torque valve.
- Increase 15% for an acceptable safety factor.
- Now look on torque chart and find near by higher torque value of your required torque.
- The found position shows the model of "aira" actuator and working pressure in bar, we need.

Example

- Suppose we need 55 Nm torque to drive a value.
- Increase 15% - 63.25 Nm for safety factor.
- In below table the nearby higher torque value is 70 at working pressure 6 bar
- This indicators to select the "aira" actuators model ARA-75- D

DOUBLE ACTING ACTUATOR TORQUE CHART — Torque In Nm 10Nm = 1 kgf

Model	1 BAR	2 BAR	3 BAR	4 BAR	5 BAR	6 BAR	7 BAR	8 BAR
ARA - 49 - D	2	5	8	11	14	16	19	23
ARA - 50 - D	3	8	13	18	22	27	32	36
ARM - 63 - D	4	10	16	23	30	36	43	50
ARA - 75 - D	9	23	36	50	64	77	91	105
ARM - 83 - D	12	27	41	55	69	83	98	112
ARA - 90 - D	25	55	84	114	142	170	198	225
ARA - 110 - D	32	76	119	162	206	250	294	338
ARA - 127 - D	72	145	221	296	371	446	521	596
ARA - 140 - D	80	185	290	397	490	608	700	817
ARA - 160 - D	140	292	448	604	758	915	1070	1227
ARM - 190 - D	214	430	646	861	1077	1292	1508	1723
ARA - 210 - D	303	706	1105	1488	1880	2183	2486	2789
ARM - 240 - D	406	832	1221	1628	2031	2445	2849	3256
ARM - 270 - D	650	1305	1958	2611	3264	3916	4569	5222
ARM - 300 - D	800	1602	2403	3205	4006	4807	5608	6409
ARM - 350 - D	1200	2399	3598	4798	5998	7197	8397	9596
ARM - 400 - D	1715	3418	5127	6837	8546	10255	11964	13673

Pub. on: January, 2015 (Rev.-01)

Pneumatic
Rotary Actuator Single Acting
As Per ISO 5211

Catalogue No.
APL / 2002

aira
VALVE AUTOMATION
ISO 9001 CO.

"aira"

offers ISO 5211 Standard Pneumatic Actuator for all your 90° / 180° Valves & Dampers Automation Requirements

CE Approved

1. **Hard Anodized** Barrel / Body to Protect from Hazardous atmosphere & corrosion, which enhance life of actuator
2. **Namur Standard Pinion Top** (An International Standard) The pinion (shaft) top drilled and slotted for easy assembling of switch, positioners and other accessories.
3. **Namur pad for Solenoid Valve** (An International Standard) Air supply ports are Include On Body as per NAMUR standard to facilitate direct mounting of solenoid valve at actuator.
4. **ISO - 5211 Standard Mounting for Valve** (An International Standard) Double bottom driling for actuator to valve Assembling & centering. Designed for strength and easy mounting or interchangeability.
5. **ISO - 5211 Standard Pinion Bottom** (An International Standard) Bottom of the pinion (Shaft) as female key, double square hole for assembling on valves with square key stem and in line or turned to 45°. Designed for strength and sure-fix with stem
6. **Sliding Skates :** The innovation for replaceable sliding skates, between Pistons (Racks) and internal bore surface of the Actuator, just to avoid metal contact, which enhances the Actuator life
7. **Compact Design : "aira"** Actuators are designed as compact and single acting (spring return) which offers high torque values. Internal sliding surface, lapped and anodized for minimum friction and long life of actuator. .

General Features :

1. Opr. press : 60 to 115 psi
2. Temperature range : -20 °C to 90 °C
3. Air supply : Filtered, dry or lubricated
4. Ext. protection : Corrosion strength to 500 hours in salted fog

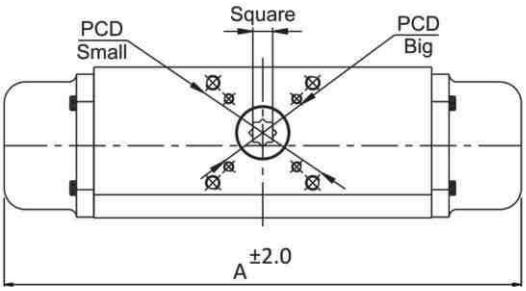

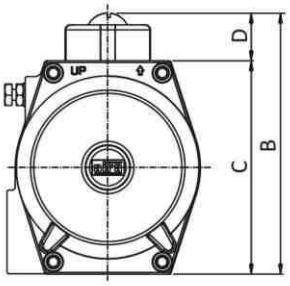

Dimensions : (All Dimensions are in mm)

Model	A	B	C	D	PCD SMALL	PCD BIG	SQUARE	WEIGHT (Approx) Kgs.	AIR CONSUMPTION In Liters
ARA - 49 - S	140.5	98	69.5	28.5	36	50	11X11	1.250	0.1
ARA - 50 - S	181.1	101.5	74	27.5	36	50	14X14	1.500	0.16
ARM - 63 - S	206.3	113.6	87.8	25.8	50	70	14X14	2.800	0.27
ARA - 75 - S	254.5	126.5	100	26.5	50	70	17X17	3.450	0.31
ARM - 83 - S	264	135.4	109.4	26	50	70	17X17	4	0.53
ARA - 90 - S	335.4	145.4	117	28.4	----	70	17X17	7	0.55
ARA - 110 - S	335.6	166	140	26	70	102	22X22	10.500	1.13
ARA - 127 - S	435.1	179	153	26	102	125	27X27	16.150	1.5
ARA - 140 - S	489.8	198	172	26	102	125	27X27	19.650	1.75
ARA - 160 - S	626.4	228	196	32	102	125	36X36	36.650	3.2
ARM - 190 - S	550.6	275.2	232.2	43	-----	140	36X36	37.600	7.38
ARA - 210 - S	777.4	292.3	253.1	39.2	-----	140	36X36	84.100	8.46
ARM - 240 - S	620	320.2	292.5	27.7	-----	165	46X46	72.400	On Request.
ARM - 270 - S	733.4	364.3	328.4	35.9	-----	165	46X46	104.600	On Request.
ARM - 300 - S	825	393.7	355.7	38	-----	165	46X46	196.600	On Request.
ARM - 350 - S	842.2	445.6	410.6	35	-----	165	46X46	250.500	On Request.
ARM - 400 - S	926.5	503.6	463.4	40.2	-----	165	55X55	344.500	On Request.

Note : Since, constant worldwide advancement in technology, we keep our rights reserved to make changes time to time in Technical specifications and Dimensions without prior notice.

Pub. on: January, 2015 (Rev.-01)

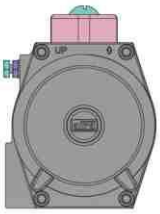

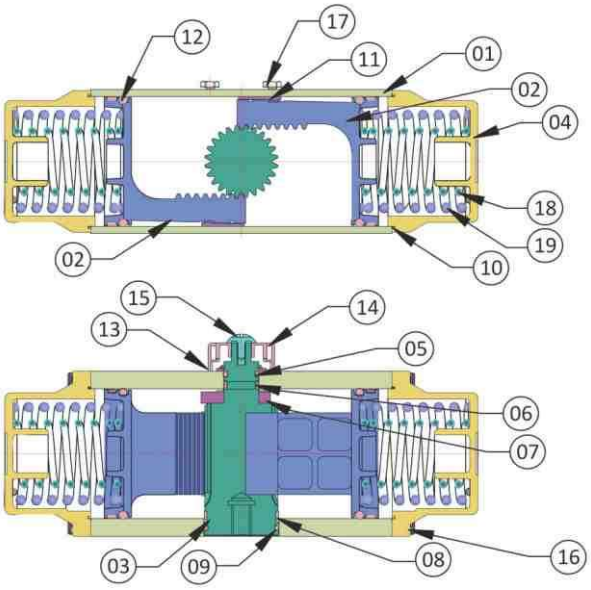

Parts List			
NO	Name	Material.	Qty
1	Body	Aluminium Alloy with Hard Anodised	01
2	Piston	Aluminium Alloy	02
3	Shaft	EN 8 with Hard Chrome Plated	01
4	End Cover	Aluminium Alloy	02
5	Shaft UP 'O' Ring	NBR	01
6	Shaft UP Guide	Delrin	01
7	Adaptor	EN 8 with Hard Chrome Plated	01
8	Shaft Low Guide	Delrin	01
9	Shaft Low 'O' Ring	NBR	01
10	'O' Ring For End Cap	NBR	02
11	Piston Skates	Delrin	02
12	'O' Ring For Piston	NBR	02
13	Indicator	Nylon	01
14	Indicator Strip	Nylon	04
15	Indicator Screw	Nylon	01
16	L. N. Bolt For End Cap	S. S.	08
17	Adjustable Bolt	S. S.	02
18	Spring (RH)	Spring Steel	02
19	Spring (LH)	Spring Steel	02

"aira" ACTUATOR SELECTION CHART

Selection of Single Acting Actuator

- Conclude your required torque value.
- Increase 25% for an acceptable safety factor.
- Now look on TABLE your required torque value should be nearby higher value of "FIX TORQUE BY SPRING" & "TORQUE BY AIR / GAS PRESSURE."
- The found position shows the model of "aira" actuator and working pressure in bar, we

Example

- Suppose we need 120 Nm torque to drive a valve.
- Increase 25% - 150 Nm for safety factor.
- In table given below "aira" actuator model ARA-110-S Show 165 Nm

Actuator Spring Set

Model	ARA-49-S, ARA-50-S, ARM-63-S, ARA-75-S, ARM-83-S, ARA-90-S, ARA-110-S, ARA-127-S, ARA-140-S, ARA-160-S						ARA-210-S					
Spring Set	5	6	7	8	9	10	11	12	13	14	15	16
RH	0	1	2	1	2	2	0	1	2	2	2	2
LH	2	1	0	2	1	2	2	1	0	2	2	2
BIG LH	----------						0	0	0	0	1	2

Model	SPRING SET	AT PRESSURE															Torque In Nm 10Nm = 1 kgf
		SPRING		2 BAR		3 BAR		4 BAR		5 BAR		6 BAR		7 BAR		8 BAR	
		Min.	Max.	Min.	Max.	Min.	Max.	Min.	Max.	Min.	Max.	Min.	Max.	Min.	Max.	Min.	Max.
ARM-49-S	5	2.3	5.7	0	1	3	4	6.5	6.5	9.2	9.8	13.4	13.1	16.7	16.1	20.1	19.1
ARM-49-S	6	2.9	7.5	0	0.7	1.5	2.8	4.8	5.8	7.9	8.9	11.5	12	14.9	14.8	18.1	18.4
ARM-49-S	7	2.6	9.4	0	0.8	0	1	3	2	6.2	4.6	9.6	7.8	13.1	10.7	16.1	14.1
ARM-49-S	8	2.8	10.7	0	1	0	1.2	1.3	2.6	4.5	5.3	8.2	8	11.5	10.7	14.5	14
ARM-49-S	9	3.1	12.8	0	1.3	0	1.5	0	3.4	2.6	5.6	5.8	8.1	9.2	11	12.8	14.4
ARM-49-S	10	7.2	15.2	0	0.6	0	0.7	0	1.1	0	4.2	2.4	7.3	5.2	10.3	8.2	13.2
ARA-50-S	5	3.1	11.5	0	6.6	2	10.5	7.1	14.5	12.1	18.8	17.2	22.8	22.5	27.4	27.6	32
ARA-50-S	6	5.2	15	0	4.4	0	7.5	3.6	10.8	8.7	14	13.9	17.3	18.5	21.4	23.7	25.7
ARA-50-S	7	7	20	0	4	0	7.3	0	10.5	1.5	14.6	6.5	19.2	11.3	24.2	16.2	29.2
ARA-50-S?	8	4.5	13.8	0	2	0	6.5	2.5	11.5	7.7	15.5	12.4	20.5	17.3	25.3	22.5	30
ARA-50-S	9	7	18.5	0	0	0	3.5	0	8.5	2	13	6.9	17.8	11.7	22.5	16.5	27
ARA-50-S	10	8.2	22.1	0	0	0	0	0	6.8	0	11.9	3.4	16.6	8.2	21.4	13.1	26.3

Pub. on: January, 2015 (Rev.-01)

Pneumatic

Rotary Actuator Single Acting

As Per ISO 5211

aira
VALVE AUTOMATION
ISO 9001 CO.

Model	SPRING SET	AT PRESSURE															Torque In Nm 10Nm = 1 kgf
		SPRING		2 BAR		3 BAR		4 BAR		5 BAR		6 BAR		7 BAR		8 BAR	
		Min.	Max.	Min.	Max.	Min.	Max.	Min.	Max.	Min.	Max.	Min.	Max.	Min.	Max.	Min.	Max.
ARM-63-S	5	4.1	5	0	2.3	4.3	6.7	10.3	12.2	17.4	18	24.6	24.7	31.7	31.7	39.1	39.1
ARM-63-S	6	6.5	8.1	0	4	3.6	6.4	10.5	13.6	17.6	20.5	24.7	27.6	31.8	34.7	38.8	42
ARM-63-S	7	11.2	17	0	2.3	0	5.3	0	8.6	3.9	12.7	10	18.8	16.7	25.6	24	32.7
ARM-63-S	8	10	16.7	0	0	1.5	7.5	9.2	14.6	16.4	21.4	24.1	28.3	30.8	36.5	37.5	43.3
ARM-63-S	9	13.6	21.5	0	0	0	4	4.5	11.6	11.5	18.7	18.6	25.5	25.7	33.5	32.1	39.5
ARM-63-S	10	15.7	24.5	0	0	0	2	0	8.6	4.6	15.3	11.5	22.2	18.3	29.4	25.4	36.1
ARA-75-S	5	8.3	18.5	33	10	17.9	24	31.8	37	44.2	51.5	54.6	65.8	62.4	79	69	93.5
ARA-75-S	6	10	25	0	0	12.9	15.6	25	29.2	32	42.8	41	57.6	50	70.9	58.7	85
ARA-75-S	7	14.5	30.3	0	1.3	6.2	15.5	13.2	29	19.8	42.7	25.9	56.5	32	70.5	37.7	84
ARA-75-S	8	20	29.7	0	0	2.5	13	17	26	30	38	43	51	54.5	63.8	65	79
ARA-75-S	9	24.8	35	0	0	0	11	12.1	24.5	24.4	37.4	35	50.2	42	63.3	48.5	76.8
ARA-75-S	10	25	46.9	0	0	0	0.7	0	12	11.3	24.8	24.2	37.5	34.5	50.7	48	63.8
ARM-83-S	5	7.5	14.7	16.1	22.3	32.3	36.6	46.9	50.8	61.5	64.8	76.6	79.2	91.1	93.5	105.4	107.8
ARM-83-S	6	19.4	30	0	8.3	9	23.2	24.2	37.2	39.1	51.8	53.6	66.8	67.9	81.3	82.4	95.5
ARM-83-S	7	24.6	38.3	0	2.5	3.2	17.2	18.3	31.9	32.7	45.8	47.1	60.3	61.6	74.9	76.5	89.7
ARM-83-S	8	20.3	37.8	0	0	0	13.2	12.5	27.3	26.6	40.9	41.6	55.6	55.6	69.3	69.5	83.5
ARM-83-S	9	34.8	53.8	0	0	0	4.5	0	18.6	14.5	32.6	28.7	46.7	42.4	60.3	56.4	74.8
ARM-83-S	10	51	78.5	0	4.5	0	8	0	12.4	0	17.6	0	23.8	12.2	34.4	27.2	48
ARA-90-S	5	9	38.7	14.4	43.5	44.7	74.9	67.8	106.1	82.3	137.1	88.8	168.7	92.5	199.9	94.4	226
ARA-90-S	6	22.6	67.7	0	25	8.6	56	39.6	86.5	67.6	117.5	93.4	148.3	101	180	106.6	211.8
ARA-90-S	7	19.9	110.8	0	0	0	39.5	0	68.8	30.1	100.7	60.2	132.3	88.6	163.4	106.7	194.5
ARA-90-S	8	19.2	78.9	0	18.7	0	45.5	24.5	76	55.5	104	75.5	138.5	95	167.5	111	194
ARA-90-S	9	21	119	0	8	0	35	0	64.5	16	92	47.2	124	79.5	153	104.5	185
ARA-90-S	10	44.1	127.4	0	2.2	0	31.5	0	62.8	6.2	93.2	35.4	124.6	63.4	154.2	69.4	185.3
ARA-110-S	5	47	89	0	33	30	78	74	123	117	168	162	214	206	259	247	305
ARA-110-S	6	58	117	0	20	0	64	41	109	85	152	127	195	170	240	208	286
ARA-110-S	7	72	146	0	0	0	44	11	89	54	134	98	178	142	222	185	267
ARA-110-S	8	85	165	0	0	0	32	0	78	22	123	68	167	112	212	154	252
ARA-110-S	9	102	192	0	0	0	17	0	64	0	111	12	152	19	195	25	234
ARA-110-S	10	121	235	0	0	0	0	0	34	0	78	6	123	47	165	90	210
ARA-127-S	5	25	72	71	110	142	185	202	260	246	336	292	413	325	487	353	564
ARA-127-S	6	70	164	0	54	36	125	111	202	185	278	248	355	302	430	318	505
ARA-127-S	7	107	253	0	14	0	85	27	154	100	223	173	297	244	371	309	444
ARA-127-S	8	82	187	0	36	0	113	72	189	153	268	203	342	233	415	258	488
ARA-127-S	9	144	277	0	0	0	70	0	145	43	206	62	282	*	358	*	430
ARA-127-S	10	150	328	0	4	0	42	0	118	14	190	87	263	161	337	231	410
ARA-140-S	5	17	28	59	133	153	233	248	333	300	423	335	509	370	608	404	710
ARA-140-S	6	49	166	0	109	63	212	122	317	130	423	132	528	138	633	140	735
ARA-140-S	7	106	264	0	71	0	175	95	277	193	383	219	488	245	597	247	701
ARA-140-S	8	77	215	0	108	36	205	116	308	137	412	142	515	149	615	*	712
ARA-140-S	9	114	293	0	58	0	160	0	266	110	368	145	471	157	572	181	667
ARA-140-S	10	112	327	0	37	0	142	19	245	120	349	216	455	298	557	347	656
ARA-160-S	5	85	170	115	211	266	368	414	518	566	672	720	831	839	985	928	1135
ARA-160-S	6	120	241	17	158	168	299	316	450	459	597	522	743	586	886	650	1030
ARA-160-S	7	175	356	0	96	44	245	193	392	342	540	480	688	573	833	645	982
ARA-160-S	8	163	343	0	85	55	246	108	407	136	563	156	718	167	873	169	1011
ARA-160-S	9	236	430	0	42	0	197	77	351	155	503	183	660	188	810	*	950
ARA-160-S	10	231	470	0	26	0	171	60	309	202	455	346	604	468	741	530	887
ARA-210-S	11	83	244	14	725	18	1118	20	1517	***	1912	***	***	***	***	***	***
ARA-210-S	12	106	399	112	689	124	1082	130	1460	135	1833	139	***	145	***	153	***
ARA-210-S	13	116	567	80	475	141	847	197	1237	217	1636	239	***	250	***	253	***
ARA-210-S	14	307	815	0	297	12	680	20	1070	29	1454	30	1843	31	***	***	***
ARA-210-S	15	415	1057	0	250	4	636	7	1115	10	1385	13	1780	16	*	17	*
ARA-210-S	16	475	1195	0	207	0	600	7	995	12	1365	16	1750	*	22	*	25

OUTPUT TORQUE OF AIR SUPPLY												Spring Stroke	
Air Pressure (bar)		3		4		5		6		7			
Model	Spring Qty.	0° Start	90° End	0° Start	90° End	0° Start	90° End	0° Start	90° End	0° Start	90° End	0° Start	90° End
ARM-190-S	5	429	320.4	644.5	535.9							217.4	326
ARM-190-S	6	385.5	255.5	601	470.7							260.9	391.2
ARM-190-S	7	342	190	557.5	405.5							304.4	456.4
ARM-190-S	8			514	340.3	729.5	555.8					347.9	521.6
ARM-190-S	9			470.6	275.1	686.1	490.6					391.3	586.8
ARM-190-S	10			427.1	209.9	642.6	425.4	858.1	640.9	1073.6	856.4	434.8	652
ARM-190-S	11					599.1	360.2	814.6	575.7	1030.1	791.2	478.3	717.2
ARM-190-S	12					555.6	295	771.1	510.5	986.6	726	521.8	782.4
ARM-240-S	5	924	690.5	1488.1	1154.6							468.5	702
ARM-240-S	6	829.9	550.1	1294	1014.2							562.6	842.4
ARM-240-S	7	736.7	409.7	1200.8	873.8							655.8	982.8
ARM-240-S	8			1107.1	733.4	1571.3	1197.6					749.5	1123.2
ARM-240-S	9			1013.4	593	1477.6	1057.2					843.2	1263.6
ARM-240-S	10			919.7	452.6	1383.9	916.8	1848.1	1381	2312.2	1845.1	936.9	1404
ARM-240-S	11							1754.4	1240.6	2218.5	1704.7	1030.6	1544.4
ARM-240-S	12							1660.7	1100.2	2124.8	1564.3	1124.3	1684.8
ARM-270-S	5	1299.7	971.2	1952.4	1623.9							658.5	987
ARM-270-S	6	1168	773.8	1820.7	1426.5							790.2	1184.4
ARM-270-S	7	1036.3	576.4	1689	1229.1							921.9	1381.8
ARM-270-S	8			1557.3	1031.7	2210	1684.4					1053.6	1579.2
ARM-270-S	9			1425.6	834.3	2078.3	1487					1185.3	1776.6
ARM-270-S	10			1293.9	636.9	1946.6	1289.6	2599.3	1942.3	3252	2595	1317	1974
ARM-270-S	11					1814.9	1092.2	2467.6	1744.9	3120.3	2397.6	1448.7	2171.4
ARM-270-S	12					1683.2	894.8	2335.9	1547.5	2988.6	2200.2	1580.4	2368.8
ARM-300-S	5	1603	1183									800	1220
ARM-300-S	6	1483	1066									920	1337
ARM-300-S	7	1330	844	2132	1646							1073	1559
ARM-300-S	8	1177	621	1979	1423	2780	2224					1226	1782
ARM-300-S	9			1825	1201	2626	2002	3427	2803			1380	2004
ARM-300-S	10			1652	977	2473	1778	3274	2579	4075	3380	1533	2228
ARM-300-S	11							3121	2357	3922	3158	1686	2450
ARM-300-S	12							2815	1878	3686	2679	1922	2929
ARM-350-S	5	2399	1739									1199	1859
ARM-350-S	6	2120	1453									1478	2145
ARM-350-S	7	1874	1096	3074	2296							1724	2502
ARM-350-S	8	1627	738	2827	1938	4027	3138					1971	2860
ARM-350-S	9			2580	1581	3780	2781	4979	3980			2218	3217
ARM-350-S	10			2335	1223	3535	2423	4734	3622	5934	4822	2463	3575
ARM-350-S	11					3288	2066	4487	3265	5690	4465	2710	3932
ARM-350-S	12					3120	1537	4319	2736	5519	3936	2878	4461
ARM-400-S	5	3418	2479									1709	2648
ARM-400-S	6	2922	1670									2205	3457
ARM-400-S	7	2647	1239	4357	2949							2480	3888
ARM-400-S	8	2372	806	4082	2516	5191	4225					2755	4321
ARM-400-S	9			3806	2085	5515	3794	7224	5503			3031	4752
ARM-400-S	10			3531	1652	5240	3361	6949	5070	8658	6779	3306	5185
ARM-400-S	11							6672	4639	8381	6348	3583	5616
ARM-400-S	12							6154	3899	8106	5608	4101	6356

Note : Since, constant worldwide advancement in technology, we keep our rights reserved to make changes time to time in Technical specifications and Dimensions without prior notice.

Pub. on: January, 2015 (Rev.-01)

Pneumatic
Rotary Actuator
As Per ISO 5211

Stainless Steel 304

Catalogue No.
APL / 2004

aira
VALVE AUTOMATION
ISO 9001 CO.

"aira"

Offers SRA Series pneumatic actuators are stainless steel actuator which incorporate latest mechanical technology, materials available and our patented technology, through designing, developing, testing and engineering application, we have obtained a high grade product with the characteristics of reliability, high performance,long cycle life, large adjustment, highest levels of corrosion protection, wide selection of model with easy and economy.

Operating Conditions :

1. Operating Media Dry or lubricated air, the non-corrosive gasses or oil
2. Air supply pressure Double acting: 2~8 Bar ; Spring return: 2~8 Bar
3. Operating temperature Standard (NBR O-ring):- 20°C ~+80°C Low temperature (Silicone O-ring):- 35°C~+80°C High temperature (Viton O-ring):-15°C~+ 150°C
4. Travel adjustment Have adjustment range of ±4° for the rotation at 90°
5. Lubrication Under normal operating condition, need not accrete lubricant
6. Application Either indoor or oarutdoor
7. Highest pressure The maximum input pressure is 10 Bar

Notes :

If an actuator is properly assembled and used , it will be maintenance free, as it has been lubricated enough to last a normal working life under normal working conditions. Should it get necessary to replace its seals, we suggest turning to my company where the product will be overhauled first, and then tested. On request, my company will be willing to provide its customers with kits and instructions.

Maintenance :

1. It is recommended that periodic checks be performed to make sure that all fasteners remain tight.
2. The actuator is supplied ready-lubricated no further lubrication is required. If lubrication is deemed necessary , use EP-1 grease.
3. Under certain working conditions (heavy duty, non-compatible operating media or abnormal operating conditions)internal seals should be checked periodically and replaced when necessary.
4. On spring return actuators, spring fatigue may set in requiring the replacement of springs. Spring should always be replaced in full sets.

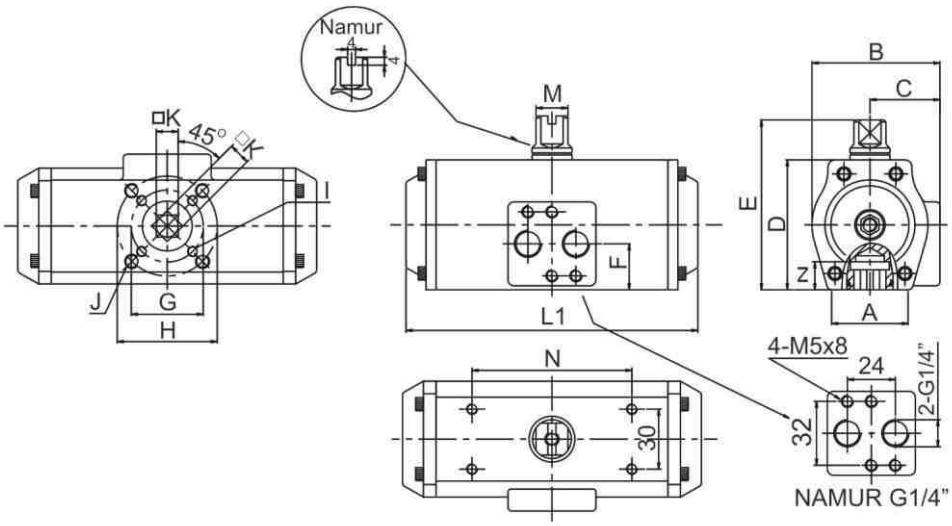

Dimensions : (All Dimensions are in mm)

Model	A	B	C	D	E	F	G	H	I	J	K	L1	M	N	Z
SRA-45	42	64	35	65	85	23	F 36	F 36	M5 x 8	M6 x 10	11X11	147	16	80	14
SRA-60	48.5	74	39	81	101	23	----	F 50	----	M6 x 10	14X14	146	16	80	18
SRA-85	66	101	52	108	128	24	F 50	F 70	M6 x 10	M8 x 13	17X17	198	16	80	21
SRA-105	80	118	60	133	153	24	----	F 70	----	M8 x 13	22X22	251	16	80	26
SRA-125	100	138	69	155	185	28	F 70	F 102	M8 x 13	M10 x 16	22X22	242	22	130	26
SRA-140	115	153	77	171	201	34	F 102	F 125	M10 x 16	M12 x 20	27X27	358	22	130	31
SRA-160	132	174	87	197	227	39	F 102	F 125	M10 x 16	M12 x 20	27X27	325	22	130	31

Pub. on: January, 2015 (Rev.-01)

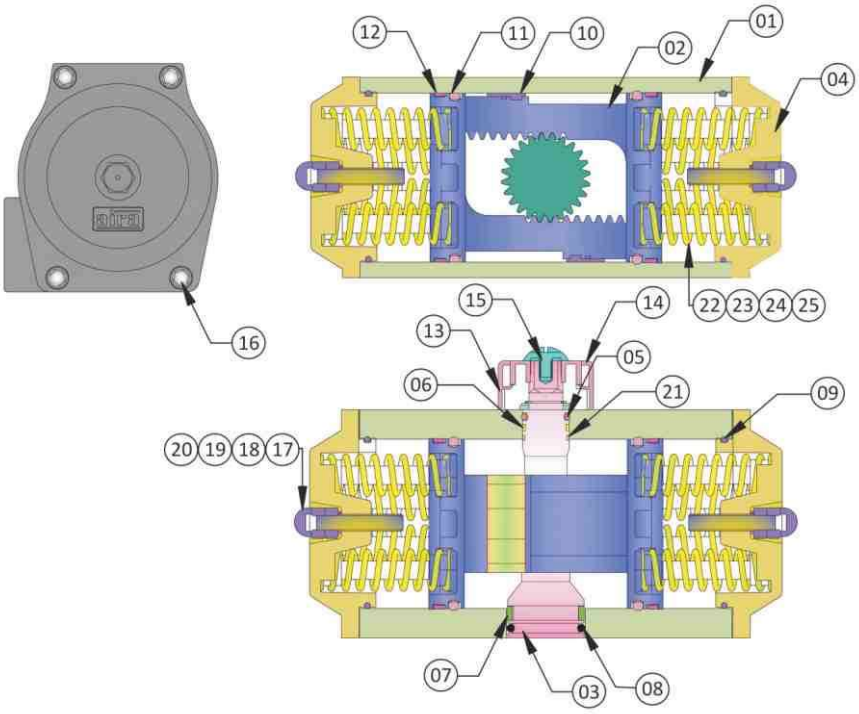

Parts List			
NO	Name	Qty	Material.
1	Body	01	Stainless Steel
2	Piston	02	Stainless Steel
3	Shaft	01	Stainless Steel
4	End Cover	02	Stainless Steel
5	Shaft UP 'O' Ring	01	NBR
6	Shaft UP Guide	01	Delrin
7	Shaft Low Guide	01	Delrin
8	Shaft Low 'O' Ring	01	NBR
9	'O' Ring For End Cap	02	NBR
10	Piston Scat	02	Delrin
11	'O' Ring For Piston	02	NBR
12	Piston Guide Ring	02	Delrin
13	Indicator	01	Nylon
14	Indicator Strip	04	Nylon
15	Indicator Screw	01	Nylon + M. S.
16	L. N. Bolt For End Cap	04	Stainless Steel
17	Adjustable Screw	02	Stainless Steel
18	Adjustable Screw Nut	02	Stainless Steel
19	Adjustable Screw Washer	02	Stainless Steel
20	Adjustable Screw O - Ring	02	NBR
21	Inside Shaft Washer	01	PTFE
22	Spring	*	Spring Steel
23	Spring Retainer (L)	*	Nylon 66
24	Spring Retainer (R)	*	Nylon 66
25	Retainer Connector	*	Brass

Torque In Nm 10Nm = 1Kgf

DOUBLE ACTING ACTUATOR TORQUE CHART

Model	Air Pressure (Bar)									
	2	2.5	3	4	4.5	5	5.5	6	7	8
SRA-45D	6.0	7.6	9.1	12.1	13.6	15.1	16.6	18.1	21.1	24.2
SRA-60D	14.2	17.8	21.3	28.4	32.0	35.5	39.1	42.6	49.7	56.8
SRA-85D	30.8	38.5	46.2	61.6	69.4	77.1	84.8	92.5	107.9	123.3
SRA-105D	65.8	82.2	98.7	131.6	148.0	164.4	180.9	197.3	230.2	263.1
SRA-125D	103	128	154	205	231	256	282	308	359	410
SRA-140D	175	219	263	351	395	439	482	526	614	702
SRA-160D	267	334	401	535	601	668	735	802	935	1069

Torque In Nm 10Nm = 1Kgf

SINGLE ACTING ACTUATOR TORQUE CHART

Model	Air Pressure (Bar)							
	2	2.5	3	4	5	6	7	8
SRA-45S	1.2	2.8	3.3	5.3	7.3	9.4	11.4	14.5
SRA-60S	3.2	6.8	8.1	13.0	17.9	22.8	27.7	34.8
SRA-85S	6.6	14.3	17.1	27.7	38.3	48.9	59.5	74.9
SRA-105S	14.0	30.4	36.5	59.1	81.5	104.1	126.6	159.5
SRA-125S	20.5	45.5	55.0	89.5	124.0	159.5	194.0	245.0
SRA-140S	39.3	83.3	100.1	161.0	221.8	281.7	342.5	430.5
SRA-160S	47.7	114.7	137.9	228.0	317.2	407.3	496.5	630.5

Note : Since, constant worldwide advancement in technology, we keep our rights reserved to make changes time to time in Technical specifications and Dimensions without prior notice.

Pub. on: January, 2015 (Rev.-01)

Pneumatic
Scotch & Yoke Actuator

Catalogue No.
APL / 1077

aira
VALVE AUTOMATION
ISO 9001 CO.

"aira"

Offers WAW / SAW Series heavy duty Scotch Yoke Actuators offer a broad range of torques to 116984 NM. The Scotch & Yoke is designed to operate Ball, Butterfly, Plug Valves, Dampers or any device that requires a quarter-turn movement for on-off or throttling services. Our standard offering is te symmetrical design yoke that delivers maximum torque at both ends of the 90° cycle. The square sliding bearing with guide bar gives high cycle life and smooth stroke while minimizing wear points. As with all "aira" actuators, our Scotch & Yoke comes with a complete line of accessories, including jackscrew, hydraulic overrides, limit switches, solenoids and positioners...

CE Approved

WAW Series Heavy Duty Scotch and Yoke Actuators features

- Travel adjustment ±8° for clock wise and counter-clock wise strokes
- Nitrile rubber piston O-rings offer excellent sealing and wear. Optional low and high temperature seals and lube are available
- RTFE Guide Band supports piston while providing smooth operation and extended life
- Extra large, strong piston rod for long life and torque transmission
- Namur accessory mounting pads permit mounting standardization of limit switches, positioners etc.
- Ductile iron center body
- Modular design allows for installing power groups and spring cartridges so that actuators may be set up for different air pressures and for Fail Clockwise and Fail Counter-clockwise
- Rugged heavy duty steel pressure cylinders chrome plated for long wear and corrosion resistance
- Safe, welded spring cartridges with numerous options for a broad range of air pressure conditions
- Alloy Steel, corrosion resistant and heat treated springs designed and manufactured for long high cycle life
- Steel slide block, bronze slide bearings to minimize friction and provide long cycle life
- Visual position indicator
- Carbon steel Scotch Yoke mechanism available in symmetric form
- Totally enclosed weatherproof central body

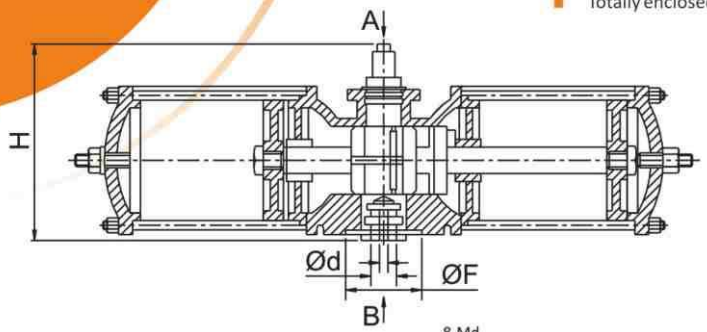

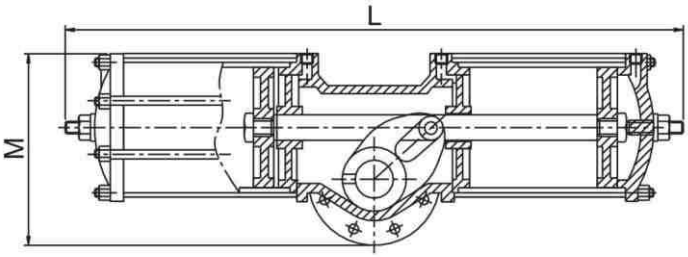

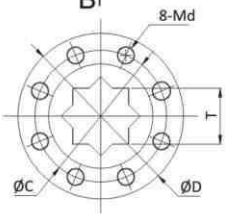

Bottom Mounting

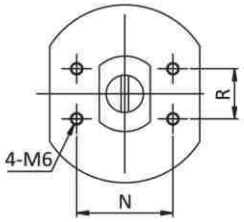

Top Mounting

WAW 14 - WAW 35 Dimensions Table DOUBLE ACTING

Model	L	H	M	ØC;C	ØD;D	Z - M	Ød	ØF	SQUARE T	W	Y	N	R	X - M	AIR SUPPLY PORT
WAW - 14	658	228	200	102	130	4-M12	32	80	27 X 27	85	95	70	35	4-M6	G 1/4"
WAW - 18	810	293	280	140	170	4-M16	45	120	34 X 34	115	145	100	50	4-M6	G 3/8"
WAW - 20A	1040	330	320	180	218	4-M16	54	130	34 X 34	120	150	120	50	4-M6	G 1/2"
WAW - 20B	1040	330	320	180	218	4-M16	54	130	38 X 38	120	150	120	50	4-M6	
WAW - 25	1200	370	387	200	235	8-M18	64	166	45 X 45	137	157	120	50	4-M6	
WAW - 28	1430	444	480	272	330	8-M18	74	220	55 X 55	160	170	130	60	4-M6	
WAW - 35	1860	450	540	300	350	8-M24	100	220	28 X 2	204	----	180	60	4-M8	
WAW - 40	1860	500	580	300	350	8-M24	100	220	28 X 2	230	----	180	60	4-M6	G 3/4"
WAW - 50	2340	615	695	356	415	8-M30	120	260	32 X 2	230	----	180	60	4-M8	
WAW - 60	2430	720	720	356	415	8-M30	120	260	32 X 2	256	----	220	60	4-M8	
WAW - 70	3160	850	920	483	550	12-M36	180	370	45 X 2	256	----	250	60	4-M8	

Note : Since, constant worldwide advancement in technology, we keep our rights reserved to make changes time to time in Technical specifications and Dimensions without prior notice.

Pub. on: January, 2015 (Rev.-01)

Dimensions Table SINGLE ACTING

Model	L	H	M	ØC;C	ØD;D	Z - M	Ød	ØF	B	W	Y	N	R	X - M	AIR SUPPLY PORT
SAW - 114	865	230	204	102	130	4-M12	32	80	8 X 2	95	70	70	35	4 - M6	G 1/4"
SAW - 118	1090	300	280	140	170	4-M16	45	120	14 X 2	145	100	100	50	4 - M6	G 3/8"
SAW - 120	1430	330	320	180	218	4-M16	54	130	14 X 2	150	120	120	50	4 - M6	G 1/2"
SAW - 125	1570	350	387	200	235	8-M16	64	166	18 X 2	150	120	120	50	4 - M6	
SAW - 128	1810	350	480	272	330	8-M18	74	220	20 X 2	157	120	120	50	4 - M6	
SAW - 135	2500	450	540	300	350	8-M24	100	220	28 X 2	170	130	130	60	4 - M8	
SAW - 140	2500	500	580	300	350	8-M24	100	220	28 X 2	----	180	180	60	4 - M8	G 3/4"
SAW - 150	3210	615	695	356	415	8-M30	120	260	32 X 2	----	180	180	60	4 - M8	
SAW - 160	3210	720	720	356	415	8-M30	120	260	32 X 2	----	180	180	60	4 - M8	

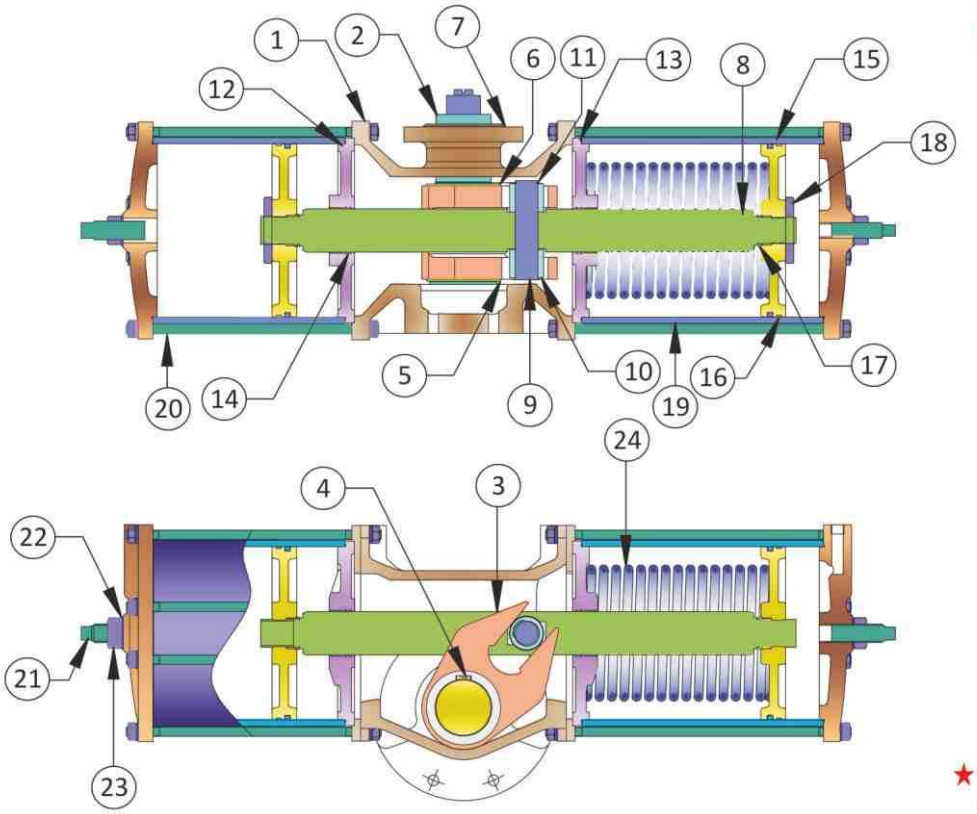

NO	DESCRIPTION	QTY
1	BODY	1
2	STEM	1
3	SCOTCH YOKE	1
4	KEY	1
5	O-RING FOR STEM LOW GUIDE	1
6	O-RING FOR STEM UP GUIDE	1
7	SNAP RING	2
8	PISTON ROD	1
9	PIN	1
10	ROLLER	2
11	SNAP RING	1
12	ADAPTOR	2
13	GASKET	2
14	O-RING	4
15	PISTON	2
16	O-RING	2
17	O-RING	2
18	NUT	2
19	CYLINDER	2
20	CYLINDER STUD	12
21	ADJUST BOLT	2
22	GASKET	2
23	CAP NUT	2
★ 24	SPRING	1

★ Only For Spring Return Single Acting Actuator

Torque In Nm 10Nm = 1 kgf

Output Torque of WAW Double Acting Pneumatic Actuator

Model	AIR SUPPLY (Bar)				
	3	4	5	6	7
WAW-14	515	620	770	930	1080
WAW-18	950	1270	1590	1910	2230
WAW-20A	1125	1500	1875	2250	2625
WAW-20B	1540	2050	2570	3090	3590
WAW-25	3075	4011	5125	6150	7175
WAW-28	5150	6860	8580	10300	12020
WAW-35	10120	13500	16870	20250	23620
WAW-40	13220	17630	22040	26450	30860
WAW-50	20790	27720	34650	41580	48510
WAW-60	30120	40160	50201	60241	70281
WAW-70	50136	66848	83560	100272	116984

Torque In Nm 10Nm = 1 kgf

Output Torque of Single Acting Pneumatic Actuator

Model	SPRING TORQUE		AIR (BAR) TORQUE Nm					
			4		5		6	
	MIN	MAX	MIN	MAX	MIN	MAX	MIN	MAX
SAW - 114	230	430	183	330	330	540	490	700
SAW - 118	330	670	600	930	920	1290	1230	1570
SAW - 120	1190	1980	800	1670	1600	2390	2320	3100
SAW - 125	1600	2510	1970	2880	3090	4000	4210	5120
SAW - 128	2080	3820	3040	4880	4760	6490	6480	8210
SAW - 135	4380	8070	5240	9110	8800	12490	12180	15860
SAW - 140	7091	12478	5873	11260	9544	14930	13214	18600
SAW - 150	14188	25463	9186	20461	16116	27391	23046	34322
SAW - 160	20102	36550	13650	30098	23691	40138	33731	50178

Note : Since, constant worldwide advancement in technology, we keep our rights reserved to make changes time to time in Technical specifications and Dimensions without prior notice.

Pub. on: January, 2015 (Rev.-01)

aira®

VALVE AUTOMATION
ISO 9001 CO.

SERIES : B

Pneumatic Rotary Actuator Operated Ball Valves

2 pc. / 3 pc. / Jacketed Design Available

Types of Valves Available

- 2 Way / 3 Way / 4 Way / 5 Way Screwed / Flanged
- Seals - PTFE / GFT / CFT / TFM / METAL TO METAL / PEEK
- Rating Upto 1500 Class
- Jacketed Valve with Replicable Seals Available
- MOC - WCB / CF8 / CF8M / CF3M
- Fire Safe Design Available

609 - 0055 CMI/L-3812155 CIMFR CE IBR

PNEUMATIC ROTARY ACTUATOR OPERATED

3 pc. Design Ball Valve

Catalogue No.
APL / 1002

aira
VALVE AUTOMATION
ISO 9001 CO.

"aira"

offers ISO 5211 Standard Pneumatic Actuator Operated Investment Casting WCB / CF8 / CF8M / CF3M Ball Valve in Three Piece design. engineered for multiple ON/OFF operations in the down stream.

6D-0519

FIRE SAFE DESIGN AVAILABLE

Size Range : 1/2" to 14" Screwed / Flanged / Triclover / Socket weld

Item	Type of Test	Testing Pressure	Working Pressure	Operating Temperature (High Temp. On Request)
Actuator	Pneumatic Bubble Test	115 PSIG	60 To 115 PSIG	-20°C to 80°C
Valve Body Screwed End	Hydraulic	450 PSIG	315 PSIG	Max.180°C
Valve Body Flanged 150#	Hydraulic	450 PSIG	315 PSIG	Max.180°C
Valve Body Flanged 300#	Hydraulic	1125 PSIG	815 PSIG	Max.180°C

Note - Fire Safe Design Available on Request **Note :** 1500# Available On Request.

Accessories :

- On / OFF Indicator
- NAMUR Standard Solenoid Valve in
- all Standard Coil Voltage (Flame Proof Solenoid Coi-on request)
- Pneumatic & Electro-Pneumaticvalve positioner
- Declutchable Manual Over - ride
- Limit Switches for On/Off Indication at Panel board
- Filter + Regulator Combination with Pressure Gauge
- Air Lock Valve

Standard :-

Design And Manufacturer	: ASME B 16.34 / BS EN ISO 17292 / API - 6D
Valve Face To Face Dimension	: ASME B 16.10
Flange Standard Conformity	: ASME B 16.5 Class 150, 300
Inspection & Testing	: API 598 / FCI - 70-2 / BS EN 12266 - 1 / API - 6D

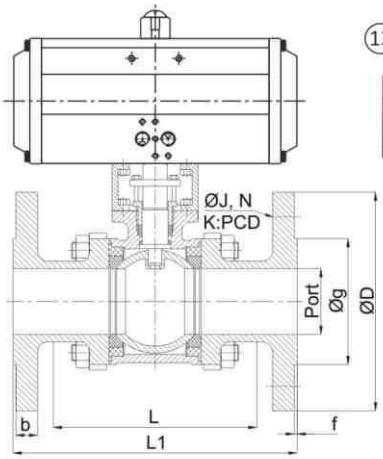

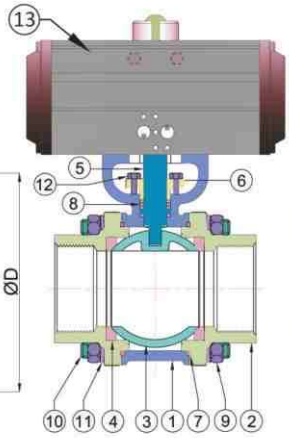

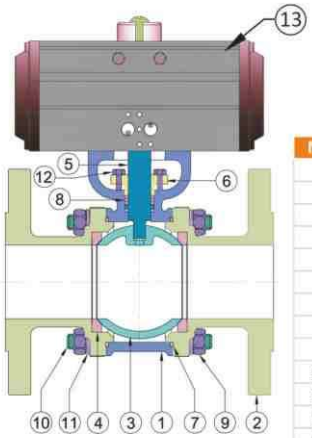

No.	DESCRIPTION	MATERIAL	QTY
1	Body	WCB / CF8 / CF8M / CF3M	01
2	End Connector	WCB / CF8 / CF8M / CF3M	02
3	Ball	CF8 / CF8M / CF3M	01
4	Ball Seat	PTFE / CFT / GFT / PEEK / TFM	02
5	Stem Pin	AISI S. S. 304 / S. S. 316	01
6	Gland with Bush	S. S. 304	01
7	Body Seat	PTFE / CFT / GFT / PEEK / TFM	02
8	Stem Seat	PTFE / CFT / GFT / PEEK / TFM	04
9	Nut	M. S. / S. S.	08
10	Stud	M. S. / S. S.	04
11	Washer	M. S. / S. S.	08
12	Gland Fitting Bolt	S. S.	02
13	Actuator	STD.	01

Dimensions : (All Dimensions are in mm)

Valve Model	Valve Size		Screwed		Flanged 150#									Weight (Approx) Kgs.	Flanged 300#									Weight (Approx) Kgs.
	MM	Inch	L	Weight Kgs.	L1	b	f	Port	Øg	ØD	ØJ	N	K:PCD		L1	b	f	Port	Øg	ØD	ØJ	N	K:PCD	
BMW - 15	15	1/2"	64	1.250	108	8	2	13	34.9	90	15.9	4	60.3	2.000	140	12.7	2	13	34.9	95	15.9	4	66.7	2.350
BMW - 20	20	3/4"	70	2.100	117	8.9	2	19	42.9	100	15.9	4	69.9	3.100	152	14.3	2	19	42.9	115	19.05	4	82.6	4.200
BMW - 25	25	1"	88	2.350	127	9.6	2	25	50.8	110	15.9	4	79.4	3.800	165	15.9	2	25	50.8	125	19.05	4	88.9	5.400
BMW - 32	32	1.1/4"	105	2.700	140	11.2	2	32	63.5	115	15.9	4	88.9	4.300	178	17.5	2	32	63.5	135	19.05	4	98.4	6.3000
BMW - 40	40	1.1/2"	114	3.600	165	12.7	2	38	73	125	15.9	4	98.4	5.900	190	19.1	2	38	73	155	22.2	4	114.3	8.400
BMW - 50	50	2"	130	5.250	178	14.3	2	49	92.1	150	19.05	4	120.7	8.650	216	20.7	2	49	92.1	165	19.05	8	127	11.050
BMW - 65	65	2.1/2"	170	12.550	190	15.9	2	62	104.8	180	19.05	4	139.7	15.000	241	23.9	2	62	104.8	190	22.2	8	149.2	19.030
BMW - 80	80	3"	200	17.700	203	17.5	2	74	127	190	19.05	4	152.4	19.350	282	27	2	74	127	210	22.2	8	168.3	26.750
BMW - 100	100	4"	210	28.900	229	22.3	2	100	157.2	230	19.05	8	190.5	32.400	305	30.2	2	100	157.2	255	22.2	8	200	42.600
BMW - 125	125	5"	-	-	254	22.3	2	125	185.7	255	22.2	8	215.9	37.000	381	33.4	2	125	185.7	280	22.2	8	235	---
BMW - 150	150	6"	-	-	267	23.9	2	150	215.9	280	22.2	8	241.3	45.000	403	35	2	150	215.9	320	22.2	12	269.9	---
BMW - 200	200	8"	-	-	292	27	2	201	269.9	345	22.2	8	298.5	85.000	419	39.7	2	201	269.9	380	25.4	12	330.2	---
BMW - 250	250	10"	-	-	330	28.6	2	252	323.8	405	25.4	12	362	106.00	457	46.1	2	252	323.8	445	28.6	16	387.4	---
BMW - 300	300	12"	-	-	610	30.2	2	303	381	485	25.4	12	431.8	---	648	49.3	2	303	381	520	31.75	16	450.8	---
BMW - 350	350	14"	-	-	648	33.4	2	334	412.8	535	28.6	12	476.3	---	765	52.4	2	334	412.8	585	31.75	20	514.4	---

Note : Since, constant worldwide advancement in technology, We keep our rights reserved to make changes time to time in Technical specifications and Dimensions without prior notice.

Pub. on: January, 2015 (Rev.-01)

PNEUMATIC ROTARY ACTUATOR OPERATED

3 pc. Design
Metal Seated Ball Valve

Catalogue No.
APL / 1078

aira
VALVE AUTOMATION
ISO 9001 CO.

"aira"

offers ISO 5211 Standard Pneumatic Actuator Operated Metal Seated Ball Valve designed for using in the server conditions such as high temperature and high friction fluid like abrasive fluids of Oil and Gas, Petroleum, Petrochemical, Chemical Power Generation, Pulp & Paper Mining Industry.

Size Range : 1/2" to 4" Screwed / Flanged

Features :

- Metal Seated Ball Valves are inherently fire safe and it's design is Metal anti-static by nature of the metal to metal contact.
- Harden face treatment on ball and seats provides the longer life cycle in Cryogenic environment.
- Advanced seat structure and high precision ball preparation can ensure Sealing performance and reduce the operation torque
- Highly precise machining enables the ball and seat tight shut-off
- Suitable for temperature range -50 °C to 500 °C (-50 °C to 800 °C (On Request)

Accessories :

- On / OFF Indicator
- NAMUR Standard Solenoid Valve in all Standard Coil Voltage (Flame Proof Solenoid Coil - on request)
- Pneumatic & Electro Pneumatic valve positioner
- Declutchable Manual Over - Ride
- Limit Switch for On/ Off Indication at Panel board
- Filter + Regulator Combination with Pressure Gauge
- Air Lock Valve

Standard :-

Design And Manufacturing	: BS EN ISO 17292
Valve Face To Face Dimension	: ASME B 16.10
Flange Standard Conformity	: ASME B 16.5 Class 150, 300
Inspection & Testing	: API 598 / FCI - 70-2 BS EN 12266 - 1

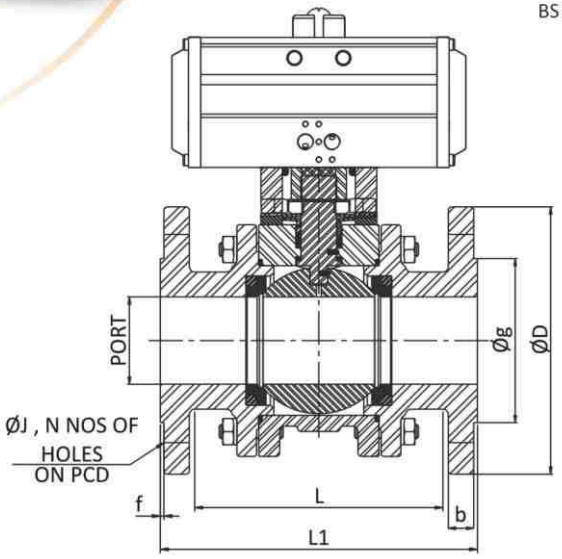

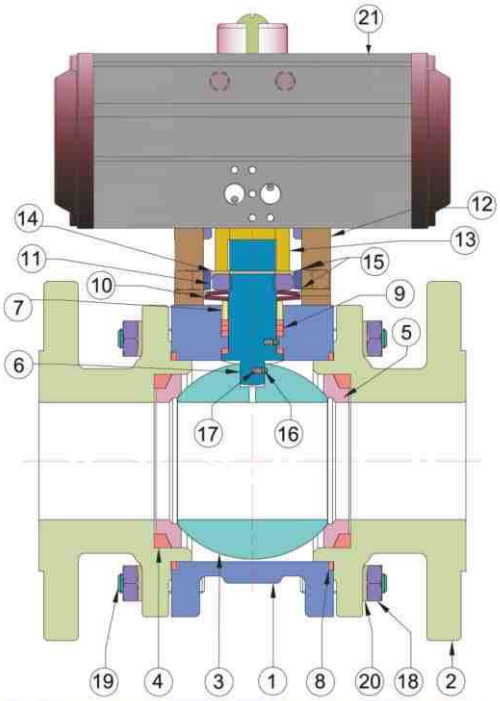

No.	DESCRIPTION	MATERIAL	QTY
1	Body	WCB / CF8 / CF8M	01
2	End Connector	WCB / CF8 / CF8M	02
3	Ball	CF8 / CF8M	01
4	Ball Back Seat	CFT	02
5	Ball Seat	S.S. 304 / 316	02
6	Stem Pin	AISI S.S. 304 / 316	01
7	Spacer Ring	S.S. 304 / 316	01
8	Body Seat	CFT	02
9	Stem Seat	CFT	04
10	Disc Spring	Spring Steel	02
11	Stem Nut	S. S. 304	01
12	Bracket	CF8	01
13	Adaptor	S. S. 304	01
14	Lock Washer	S. S. 304	01
15	Bracket Fitting Hex Bolt + Spring Washer	S. S. 304	04
16	Antistatic Ball	S. S. 304	02
17	Antistatic Spring	S. S. 302	02
18	Fitting Nut	H. T. / S. S. 304	08
19	Fitting Stud	H. T. / S. S. 304	04
20	Spring Washer	H. T. / S. S. 304	08
21	Actuator	STD.	01

Dimensions : (All Dimensions are in mm)

Valve Model	Valve Size		Screwed		Flanged 150#									Weight (Approx) Kgs.
	MM	Inch	L	Weight Kgs.	L1	b	f	Port	Øg	ØD	ØJ	N	K:PCD	
BMS - 15	15	1/2"	71	2.300	108	8	2	13	34.9	90	15.9	4	60.3	2.950
BMS - 20	20	3/4"	94	2.950	117	8.9	2	19	42.9	100	15.9	4	69.9	4.200
BMS - 25	25	1"	108.5	3.700	127	9.6	2	25	50.8	110	15.9	4	79.4	4.900
BMS - 32	32	1.1/4"	116	4.400	140	11.2	2	32	63.5	115	15.9	4	88.9	6.050
BMS - 40	40	1.1/2"	128	5.750	165	12.7	2	38	73	125	15.9	4	98.4	7.900
BMS - 50	50	2"	158	8.800	178	14.3	2	49	92.1	150	19.05	4	120.7	9.950
BMS - 65	65	2.1/2"	185	13.300	190	15.9	2	62	104.8	180	19.05	4	139.7	19.900
BMS - 80	80	3"	205	19.100	203	17.5	2	74	127	190	19.05	4	152.4	26.450
BMS - 100	100	4"	239	28.900	229	22.3	2	100	157.2	230	19.05	8	190.5	37.900

Note : 300# & 600# Dimension are On Request. **Note : Big Sizes 5" to 10" On Request.**

Note : Since, constant worldwide advancement in technology, We keep our rights reserved to make changes time to time in Technical specifications and Dimensions without prior notice.

Pub. on: January, 2015 (Rev.-01)

PNEUMATIC ROTARY ACTUATOR OPERATED

2 pc. Design "VGO" Ball Valve

Catalogue No.
APL / 2027

aira®
VALVE AUTOMATION
ISO 9001 CO.

"aira"

offers ISO 5211 Standard Pneumatic Actuator Operated Investment Casting WCB / CF8 / CF8M / CF3M Ball Valve in Two Piece design. engineered for multiple ON/OFF operations in the down stream.

Size Range : 1/2" to 14" Flanged 150# (Upto 1500# On Request)

Item	Type of Test	Testing Pressure	Working Pressure	Operating Temperature
Actuator	Pneumatic Bubble Test	115 PSIG	60 To 115 PSIG	-20 °C to 80 °C
Valve Body Flanged 150#	Hydraulic	450 PSIG	315 PSIG	Max.180 °C
Valve Body Flanged 300#	Hydraulic	1125 PSIG	815 PSIG	Max.180 °C

Standard :-

Design And Manufacturing	: BS EN ISO 17292
Valve Face To Face Dimension	: ASME B 16.10
Flange Standard Conformity	: ASME B 16.5 Class 150, 300
Inspection & Testing	: API 598 / FCI - 702 / BS EN 12266 - 1

FIRE SAFE DESIGN AVAILABLE

Accessories :

- On / OFF Indicator
- NAMUR Standard Solenoid Valve in all Standard Coil Voltage (Flame Proof Solenoid Coil - on request)
- Pneumatic & Electro Pneumatic valve positioner
- Declutchable Manual Over - Ride
- Limit Switch for On/ Off Indication at Panel board
- Filter + Regulator Combination with Pressure Gauge
- Air Lock Valve

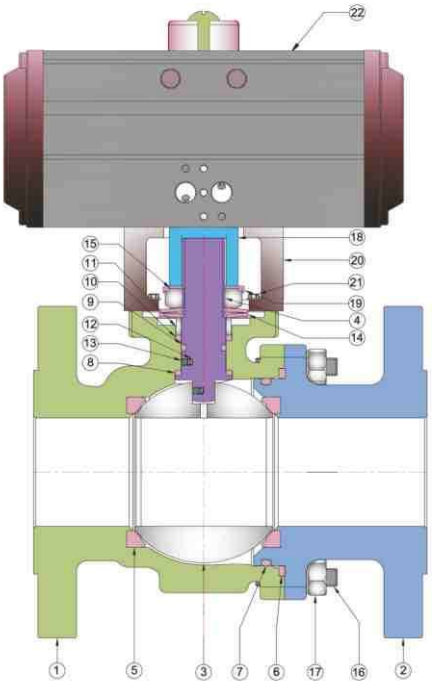

No.	DESCRIPTION	MATERIAL	QTY
1	Body	WCB / CF8 / CF8M	01
2	End Connector	WCB / CF8 / CF8M	01
3	Ball	CF8 / CF8M	01
4	Stem Pin	AISI S.S. 304 / 316	01
5	Ball Seat	PTFE / CFT / GFT / PEEK / TFM	02
6	Body Seat	Grafoil	01
7	Conn,- 'O' Ring	PTFE / CFT / GFT / PEEK / TFM	01
8	Stem Seat Bottom	PTFE / CFT / GFT / PEEK / TFM	01
9	Stem 'O' Ring	PTFE / CFT / GFT / PEEK / TFM	01
10	Stem Seat Top	Grafoil	01
11	Spacer Ring	S.S. 304 / 316	01
12	Antistatic Spring	S.S. 302	02
13	Antistatic Ball	S.S. 304	02
14	Disc Spring	Spring Steel	02
15	Stem & Handle Nut	S.S. 304	01
16	Fitting Stud	H.T. / S.S. 304	06
17	Fitting Nut + Spring Washer	H.T. / S.S. 304	06
18	Adaptor	S.S. 304	01
19	Lock Washer	S.S. 304	01
20	Bracket	CF8	01
21	Bracket Fitting Hexbolt + Spr. Washer	S.S. 304	04
22	Actuator	STD	01

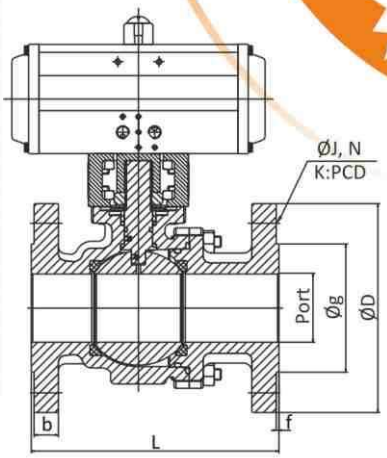

Dimensions : (All Dimensions are in mm)

Valve Model	Valve Size		Flanged 150#									Weight (Approx) Kgs	Flanged 300#									Weight (Approx) Kgs
	MM	Inch	L	b	f	Port	Øg	ØD	ØJ	N	K:PCD		L	b	f	Port	Øg	ØD	ØJ	N	K:PCD	
VGO - 15	15	1/2"	108	8	2	13	34.9	90	15.9	4	60.3	1.750	140	12.7	2	13	34.9	95	15.9	4	66.7	2.650
VGO - 20	20	3/4"	117	8.9	2	19	42.9	100	15.9	4	69.9	3.100	152	14.3	2	19	42.9	115	19.05	4	82.6	4.300
VGO - 25	25	1"	127	9.6	2	25	50.8	110	15.9	4	79.4	3.200	165	15.9	2	25	50.8	125	19.05	4	88.9	5.100
VGO - 32	32	1.1/4"	140	11.2	2	32	63.5	115	15.9	4	88.9	3.900	178	17.5	2	32	63.5	135	19.05	4	98.4	6.600
VGO - 40	40	1.1/2"	165	12.7	2	38	73	125	15.9	4	98.4	5.200	190	19.1	2	38	73	155	22.2	4	114.3	8.900
VGO - 50	50	2"	178	14.3	2	49	92.1	150	19.05	4	120.7	7.650	216	20.7	2	49	92.1	165	19.05	8	127	12.750
VGO - 65	65	2.1/2"	190	15.9	2	62	104.8	180	19.05	4	139.7	13.500	241	23.9	2	62	104.8	190	22.2	8	149.2	18.900
VGO - 80	80	3"	203	17.5	2	74	127	190	19.05	4	152.4	17.850	282	27	2	74	127	210	22.2	8	168.3	25.950
VGO - 100	100	4"	229	22.3	2	100	157.2	230	19.05	8	190.5	29.100	305	30.2	2	100	157.2	255	22.2	8	200	41.900
VGO - 125	125	5"	254	22.3	2	128	185.7	255	22.2	8	215.9	--	381	33.4	2	128	185.7	280	22.2	8	235	----
VGO - 150	150	6"	267	23.9	2	150	215.9	280	22.2	8	241.3	--	403	35	2	150	215.9	320	22.2	12	269.9	----
VGO - 200	200	8"	457	27	2	201	269.9	345	22.2	8	298.5	--	502	39.7	2	201	269.9	380	25.4	12	330.2	----
VGO - 250	250	10"	533.4	28.6	2	252	323.8	405	25.4	12	362	--	568.4	46.1	2	252	323.8	445	28.6	16	387.4	----
VGO - 300	300	12"	609.6	30.2	2	303	381	485	25.4	12	431.8	--	648	49.3	2	303	381	520	31.75	16	450.8	----
VGO - 350	350	14"	----	33.4	2	334	412.8	535	28.6	12	476.3	--	----	52.4	2	334	412.8	585	31.75	20	514.4	----

Note : Since, constant worldwide advancement in technology, We keep our rights reserved to make changes time to time in Technical specifications and Dimensions without prior notice.

Pub. on: January, 2015 (Rev.-01)

PNEUMATIC ROTARY ACTUATOR OPERATED

Polypropylene Ball Valve

Catalogue No.
APL / 1005

aira
VALVE AUTOMATION
ISO 9001 CO.

"aira"

offers ISO 5211 Standard Pneumatic Rotary Actuator Operated Polypropylene Body Ball Valve, engineered for multiple ON/OFF Operations in the Highly Corrosive Alklies and Acidic Media.

Size Range : 1/2" to 12" Screwed / Flanged

Body	Seat	Temperature
150 PSI	150 PSI	100°C

PVDF for Highly Acedic Media Available on Request

Accessories :

- On / OFF Indicator
- NAMUR Standard Solenoid Valve in all Standard Coil Voltage (Flame Proof Solenoid Coil - on request)
- Pneumatic & Electro Pneumatic valve positioner
- Declutchable Manual Over - Ride
- Limit Switch for On/ Off Indication at Panel board
- Filter + Regulator Combination with Pressure Gauge
- Air Lock Valve

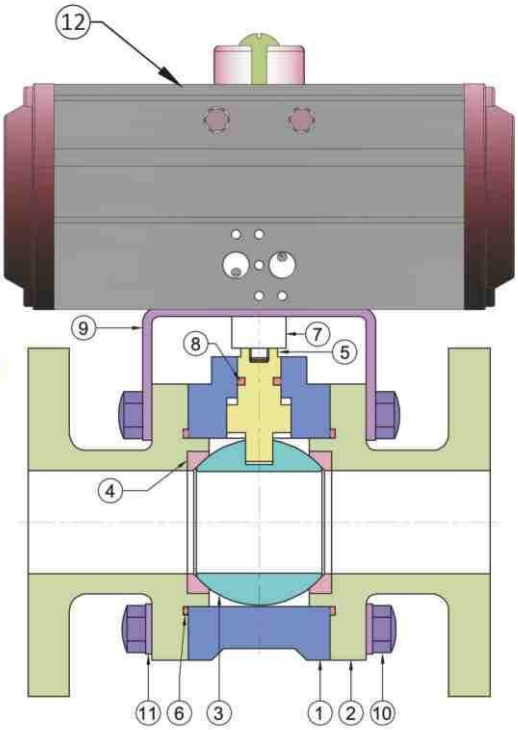

No.	DESCRIPTION	MATERIAL	QTY
1	Body	Polypropylene	01
2	End Connector	Polypropylene	02
3	Ball	Polypropylene	01
4	Ball Seat	PTFE	02
5	Stem Pin	S.S. 304	01
6	Body Seat	PTFE	02
7	Adapter	S.S. 304	01
8	Stem 'O' Ring	NBR	01
9	Clamp	S.S. 304	01
10	Bolt	S.S. 304	04
11	Washer	S.S. 304	04
12	Actuator	STD.	01

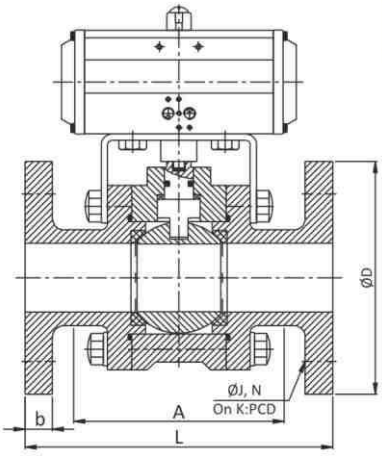

Dimensions :

(All Dimensions are in mm)

Valve Model	Valve Size		Screwed	Flanged					
	MM	Inch	A	L	b	ØD	ØJ	N	K:PCD
BMW - PP - 15	15	1/2"	127	130	16.5	96	15.9	4	60.3
BMW - PP - 20	20	3/4"	139	132	14.5	102	15.9	4	69.9
BMW - PP - 25	25	1"	150	152	18.5	121	15.9	4	79.4
BMW - PP - 32	32	1.1/4"	172	162	18	124	15.9	4	88.9
BMW - PP - 40	40	1.1/2"	172	170	18.5	140	15.9	4	98.4
BMW - PP - 50	50	2"	209	209	22.5	165	19.05	4	120.7
BMW - PP - 65	65	2.1/2"	248	230	22.5	184	19.05	4	139.7
BMW - PP - 80	80	3"	250	254	24	203	19.05	4	152.4
BMW - PP - 100	100	4"	-	310	27	229	19.05	8	190.5
BMW - PP - 150	150	6"	-	477	28	305	22.5	8	241.3
BMW - PP - 200	200	8"	-	477	30	368	22.5	8	298.5
BMW - PP - 250	250	10"	-	560	31	432	25.4	12	362
BMW - PP - 300	300	12"	-	560	31	489	25.4	12	431.8

Note : Since, constant worldwide advancement in technology, We keep our rights reserved to make changes time to time in Technical specifications and Dimensions without prior notice.

Pub. on: January, 2015 (Rev.-01)

PNEUMATIC ROTARY ACTUATOR OPERATED

High Pressure "WOG 3000" Ball Valve

Catalogue No.
APL / 1003

aira
VALVE AUTOMATION
ISO 9001 CO.

"aira"

offers ISO 5211 Standard Pneumatic Actuator Operated Low Torque High Pressure Ball Valve.

Size Range : 1/2" to 2" Screwed

Item	Type of Test	Testing Pressure	Working Pressure
Valve Body	Hydraulic	300 Kg/cm²	200 Kg/cm²
Valve Body	Pneumatic	150 PSI	100 PSI

Accessories :

- On / OFF Indicator
- NAMUR Standard Solenoid Valve in all Standard Coil Voltage (Flame Proof Solenoid Coil - on request)
- Pneumatic & Elector Pneumatic Valve Positioner
- Declutchable Manual Over - Ride
- Limit Switch for On/ Off Indication at Panel board
- Filter + Regulator Combination with Pressure Gauge
- Air Lock Valve

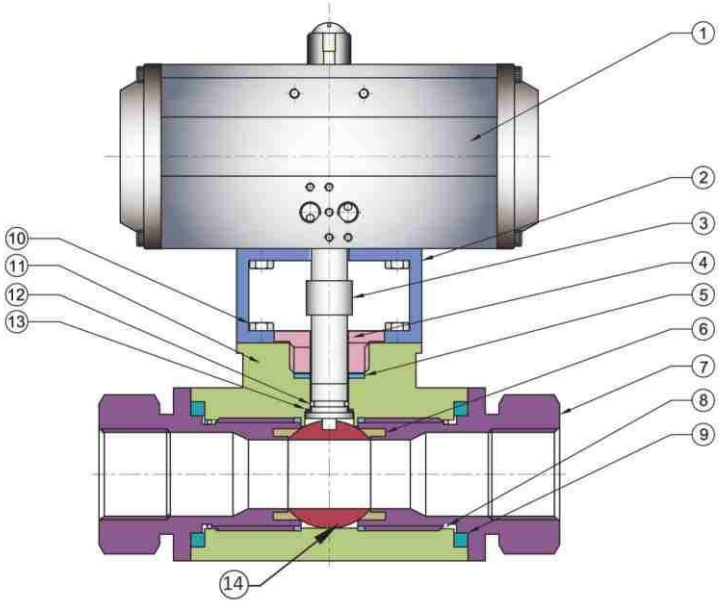

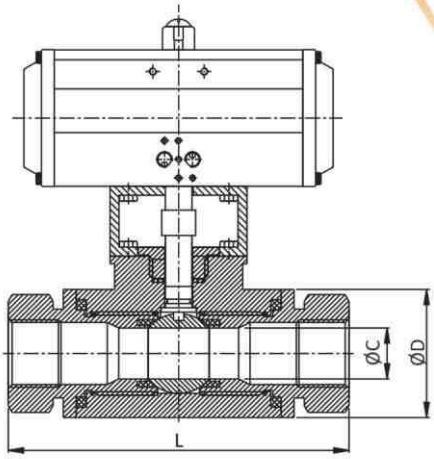

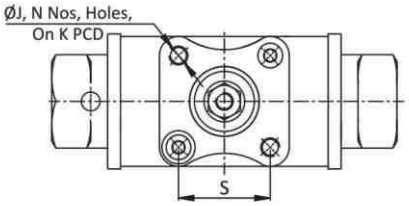

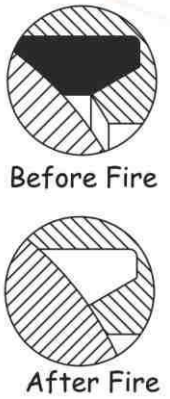

Detail 'A'

No.	DESCRIPTION	MATERIAL	QTY
1	Actuator	Standard	01
2	Bracket	CF8	01
3	Stem Pin	S.S. 304 / 316	01
4	Spacer Ring	S.S. 304 / 316	01
5	Stem Seat	Peek / Polyacetal	02
6	Ball Seat	Peek / Polyacetal	02
7	End Connector	WCB / CF8 / CF8M	02
8	'O' Ring	NBR / EPDM / Viton	02
9	Body Seat	Graphite	02
10	Fitting Stud	H.T. / S.S. 304	08
11	Body	WCB / CF8 / CF8M	01
12	'O' Ring	EPDM / Viton	02
13	Gland Packing	Peek / Polyacetal	01
14	Ball	S. S. 304 / 316	01

Dimensions :

(All Dimensions are in mm)

Valve Model	Size		L	ØC Bore	ØD	S	ØJ	N	PCD	Weight (Approx.)
	MM	Inch								
WOG - 15	15	1/2"	98	12.5	39	25.4	M5 X 0.8	4	36	2.530
WOG - 20	20	3/4"	108	18	48	31	M6 X 1	4	42	3.440
WOG - 25	25	1"	108	22	55.5	31	M6 X 1	4	42	4.100
WOG - 32	32	1.1/4"	133	32	76.5	35.3	M6 X 1	4	51.5	8.150
WOG - 40	40	1.1/2"	133	32	76.5	35.3	M6 X 1	4	51.5	7.580
WOG - 50	50	2"	159	38	89.5	35.36	M6 X 1	4	51.5	13.790

Note : Since, constant worldwide advancement in technology, We keep our rights reserved to make changes time to time in Technical specifications and Dimensions without prior notice.

Pub. on: January, 2015 (Rev.-01)

PNEUMATIC ROTARY ACTUATOR OPERATED

Wafer Type Ball Valve

Catalogue No.
APL / 1079

aira
VALVE AUTOMATION
ISO 9001 CO.

"aira"

offers ISO 5211 Standard Pneumatic Rotary Actuator Operated Investment Casting WCB / CF8 / CF8M / CF3M Wafer Type Ball Valve.

Size Range : 1" to 4" Wafer Type

Ball Valve Specification	
Working Pressure	10 Bar
Working Temperature	Upto 180 °C Max.
Valve Rating	150#
Leakage Class	Class VI

Standard :-

Design And Manufacturing	: ASME B 16.34 / API 6D
Valve Face To Face Dimension	: As Per Manufacturer Std.
Flange Standard Conformity	: ASME B 16.5 Class 150, 300
Inspection & Testing	: API 598 / FCI - 70-2 BS EN 12266 - 1

Accessories :

- On / OFF Indicator
- NAMUR Standard Solenoid Valve in all Standard Coil Voltage (Flame Proof Solenoid Coil - on request)
- Pneumatic & Electro Pneumatic valve positioner
- Declutchable Manual Over - Ride
- Limit Switch for On/ Off Indication at Panel board
- Filter + Regulator Combination with Pressure Gauge
- Air Lock Valve

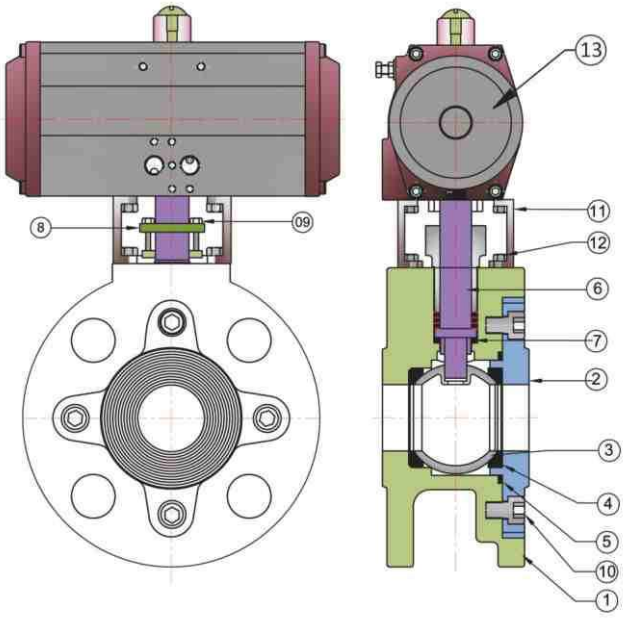

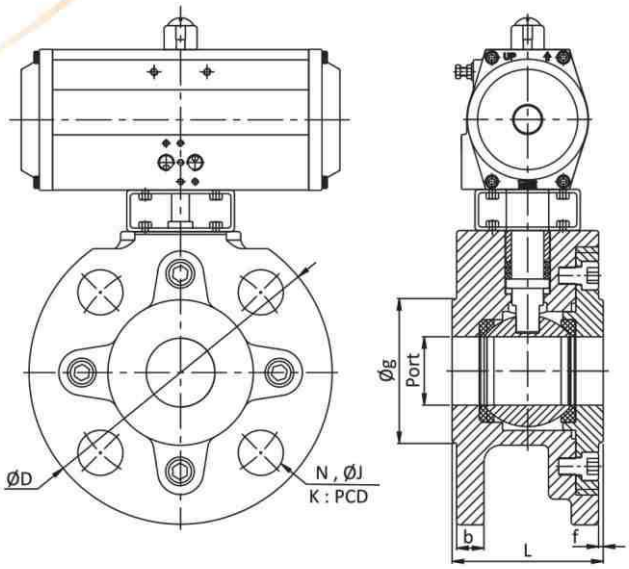

No.	DESCRIPTION	MATERIAL	QTY
1	Body	WCB / CF8 / CF8M / CF3M	01
2	Connector	WCB / CF8 / CF8M / CF3M	01
3	Ball	CF8 / CF8M / CF3M	01
4	Ball Seal	PTFE / GFT / CFT / TFM / PEEK	01
5	Ball Seat	PTFE / GFT / CFT / TFM / PEEK	02
6	Stem Pin	S. S. 304	02
7	Stem Seat	AISI 304	02
8	Gland with Bush	PTFE / GFT / CFT / TFM / PEEK	01
9	Gland Fitting Bolt	S. S.	02
10	Allen Bolt	S. S.	04
11	Bracket	S. S.	01
12	Bracket Fitting Bolt & Washer	S. S.	08
13	Actuator	STD.	01

Dimensions : (All Dimensions are in mm)

Valve Model	Size		L	b	f	Port	Øg	ØD	ØJ	N	PCD	Weight (Approx.)
	MM	Inch										
WTB - 25	25	1"	54	9.6	2	25	50.8	110	15.88	4	79.4	3.300
WTB - 32	32	1.1/4"	58.5	11.2	2	32	63.50	115	15.88	4	88.9	
WTB - 40	40	1.1/2"	63	12.7	2	38	73	127	15.88	4	98.4	5.250
WTB - 50	50	2"	73	14.3	2	49	92.1	152	19.05	4	120.7	7.650
WTB - 65	65	2.1/2"	96	15.9	2	62	104.65	177.8	19.05	4	139.7	13.700
WTB - 80	80	3"	118	17.5	2	74	127	190	19.05	4	152.4	15.600
WTB - 100	100	4"	140	22.3	2	100	157.2	230	19.05	8	190.5	26.000

Note : Since, constant worldwide advancement in technology, We keep our rights reserved to make changes time to time in Technical specifications and Dimensions without prior notice.

Pub. on: January, 2015 (Rev.-01)

PNEUMATIC ROTARY ACTUATOR OPERATED

Jacketed Ball Valve

Catalogue No.
APL / 2010

aira
VALVE AUTOMATION
ISO 9001 CO.

"aira"

offers ISO 5211 Standard Pneumatic Rotary Actuator Operated Investment Casting WCB / CF8 / CF8M / CF3M Ball Valve in 2 Piece Design Wafer Type JACKETED - engineered for multiple ON / OFF Operation in the down stream.

Size Range : 1" to 4"

First Time In INDIA
Replaceable Seals
Jacketed Ball Valve

Ball Valve Specification	
Working Pressure	10 Bar
Working Temperature	Upto 180 °C Max.
Valve Rating	150#
Leakage Class	Class VI

Standard :-

Design And Manufacturing	: ASME B 16.34 / API 6D
Valve Face To Face Dimension	: As Per Manufacturer Std.
Flange Standard Conformity	: ASME B 16.5 Class 150
Inspection & Testing	: API 598 / FCI - 70-2 / BS EN 12266 - 1

Accessories :

- On / OFF Indicator
- NAMUR Standard Solenoid Valve in all Standard Coil Voltage (Flame Proof Solenoid Coil - on request)
- Pneumatic & Electro Pneumatic valve positioner
- Declutchable Manual Over - Ride
- Limit Switch for On/ Off Indication at Panel board
- Filter + Regulator Combination with Pressure Gauge
- Air Lock Valve

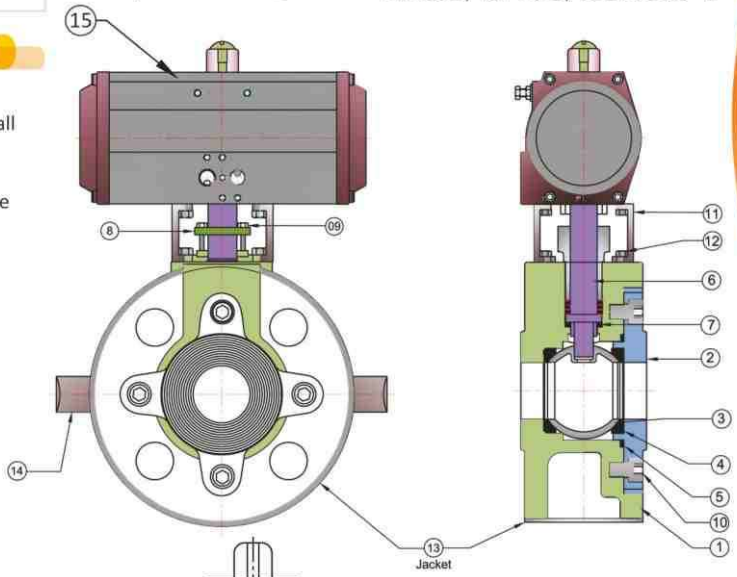

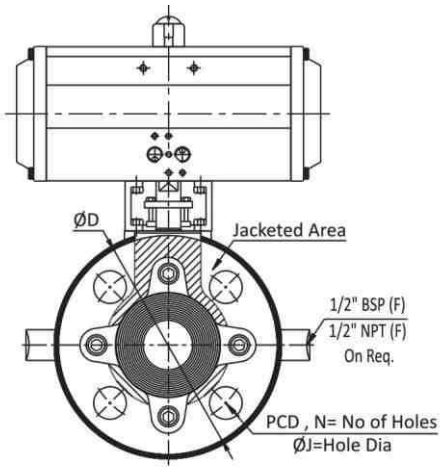

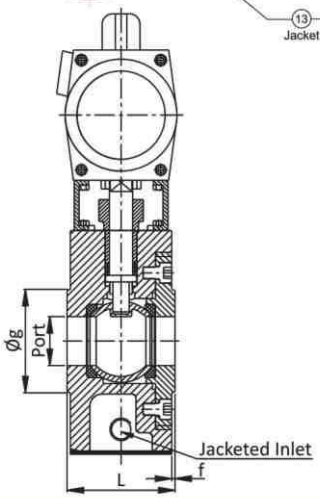

No.	DESCRIPTION	MATERIAL	QTY
1	Body	WCB / CF8 / CF8M / CF3M	01
2	Connector	WCB / CF8 / CF8M / CF3M	01
3	Ball	CF8 / CF8M / CF3M	01
4	Ball Seat	PTFE / GFT / CFT / PEEK / TFM	02
5	Body Seat	PTFE / GFT / CFT / PEEK / TFM	01
6	Stem Pin	S. S. 304	01
7	Stem Seat	PTFE / GFT / CFT / PEEK / TFM	04
8	Gland with Bush	S. S. 304	01
9	Gland Fitting Bolt	S. S.	02
10	Allen Bolt	S. S.	04
11	Bracket	S. S.	01
12	Bracket Fitting Bolt & Washer	S. S.	04
13	Jacket	S. S. / M. S.	01
14	Coupling	S. S. / M. S.	02
15	Actuator	STD.	01

Dimensions : (All Dimensions are in mm)

Valve Model	Size		Port	L	ØD	Øg	ØJ	N	f	PCD	Weight (Approx.)
	MM	Inch									
KAG - 25	25	1"	25	54	107.9	50.8	15.88	4	2	79.4	2.950
KAG - 32	32	1.1/4"	32	58.5	115	63.50	15.88	4	2	88.9	3.550
KAG - 40	40	1.1/2"	38	63	127	73	15.88	4	2	98.4	4.500
KAG - 50	50	2"	49	73	152.4	92.1	19.05	4	2	120.7	8.400
KAG - 65	65	2.1/2"	62	96	177.8	104.8	19.05	4	2	139.7	10.900
KAG - 80	80	3"	74	118	190.5	127	19.05	4	2	152.4	14.800
KAG - 100	100	4"	100	140	230	157.2	19.05	8	2	190.5	23.900

Note : Since, constant worldwide advancement in technology, We keep our rights reserved to make changes time to time in Technical specifications and Dimensions without prior notice.

Pub. on: January, 2015 (Rev.-01)

PNEUMATIC ROTARY ACTUATOR OPERATED

FEP / PFA Lined Ball Valve

Catalogue No.
APL / 2028

aira
VALVE AUTOMATION
ISO 9001 CO.

"aira"

offers ISO 5211 Standard Pneumatic Rotary Actuator Operated Investment Casting WCB / CF8 / CF8M / CF3M / S. G. Iron / D. I. FEP / PFA Lined Ball Valve In 2 pc. Design.

Size Range : 1" to 4" Flanged

Standard :-

Design And Manufacturing	: BS EN ISO 17292 : 2004 (BS 5351)
Valve Face To Face Dimension	: ANSI B 16.10 / DIN 3202 / BSEN 558-1/2
Flange Standard Conformity	: ASME B 16.5 150#
Inspection & Testing	: BS EN 12266 - 1 & 2 (2003) API - 598
Top Flange Drilling	: ASA 150# / DIN 2632 & 2633 / BSEN 10 Table D, E, F (Customer Specified)

TEST PRESSURE	
Pressure Test	As Per Customer Requirement
Spark Test	15 KV D2 API 598

Accessories :

- On / OFF Indicator
- NAMUR Standard Solenoid Valve in all Standard Coil Voltage (Flame Proof Solenoid Coil - on request)
- Pneumatic & Electro Pneumatic valve positioner
- Declutchable Manual Over - Ride
- Limit Switch for On/ Off Indication at Panel board
- Filter + Regulator Combination with Pressure Gauge
- Air Lock Valve

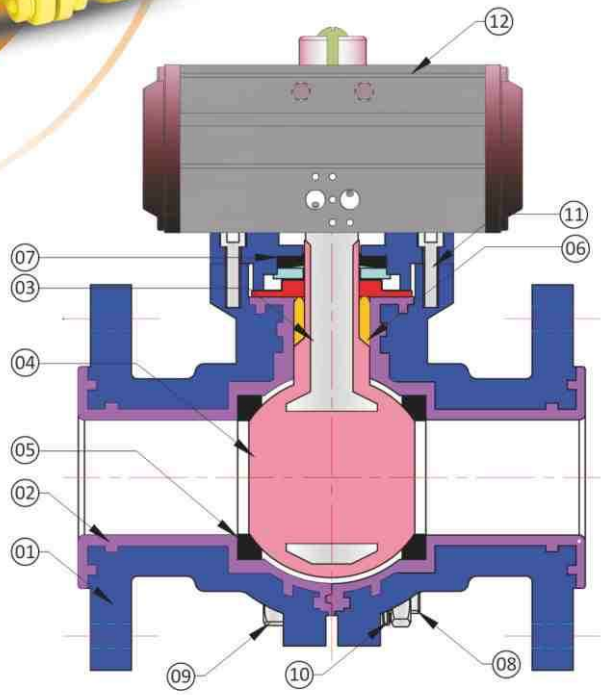

No.	DESCRIPTION	MATERIAL
1	Body	WCB / CF8 / CF8M / S. G. Iron / D. I.
2	Body Molding	FEP / PFA
3	Ball with Shaft	WCB / CF8
4	Ball Molding	FEP / PFA
5	Ball Seal	PTFE / GFT / CFT / PEEK / TFM
6	Shaft Bush	PTFE / GFT / CFT / PEEK / TFM
7	Packing Washer	Spring Steel
8	Bolt Plate	S. S.
9	Nut	S. S.
10	Washer	S. S.
11	L. N. Bolt	S. S.
12	Actuator	STD.

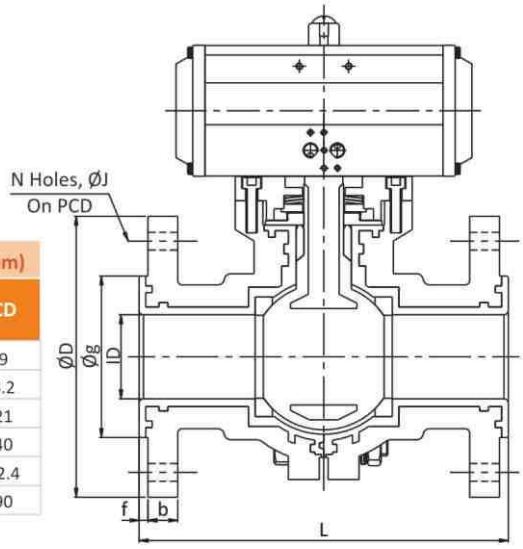

Dimensions : (All Dimensions are in mm)

Valve Model	Size MM	Size Inch	ID	L	b	f	Øg	ØD	N	ØJ	PCD
FELB - 25	25	1"	24	130.5	12.7	3.5	55	108	04	16	79
FELB - 40	40	1.1/2"	38	167	13.5	3	73	127	04	15	98.2
FELB - 50	50	2"	49	181	18	4	92	152.5	04	18.5	121
FELB - 65	65	2.1/2"	61.8	206	21	4	104.5	177.75	04	19	140
FELB - 80	80	3"	74	207	22	5.5	126	190	04	19	152.4
FELB - 100	100	4"	94	226	22	5	158	228.5	08	19	190

Note.: Big Size Also Available On Request.

Note : Since, constant worldwide advancement in technology, We keep our rights reserved to make changes time to time in Technical specifications and Dimensions without prior notice.

Pub. on: January, 2015 (Rev.-01)

PNEUMATIC ROTARY ACTUATOR OPERATED

UPVC Ball Valve

Catalogue No.
APL / 2029

aira
VALVE AUTOMATION
ISO 9001 CO.

"aira"

offers ISO 5211 Standard Pneumatic Rotary Actuator Operated UPVC Ball Valve is made with precision turning and grinding to ensure that it's true roundness and smoothness is achieved. This provides for lower torque requirement and ease of handling. True union design provides for tight shut - off. These valves are most suited for water treatment and chlorination applications. The Socket and Screwed joint available.

Size Range : 1/2" to 3"

Advantages

- NSF listed and material meet drinking water standard.
- Smooth opening and closing thanks to a lower torque.
- 100% pure virgin material, CaCO3 free (Chalk).
- UV resistant power added.
- 100% pressure testing before leaving the factory.
- Can be assembled with Pneumatic Actuators.

Accessories :

- On / OFF Indicator
- NAMUR Standard Solenoid Valve in all Standard Coil Voltage (Flame Proof Solenoid Coil - on request)
- Pneumatic & Electro Pneumatic valve positioner
- Declutchable Manual Over - Ride
- Limit Switch for On/ Off Indication at Panel board
- Filter + Regulator Combination with Pressure Gauge
- Air Lock Valve

Ball Valve Specification	
Working Pressure	7 Kg/cm^2
Working Temperature	Upto 80 °C Max.
Ends	Screwed End

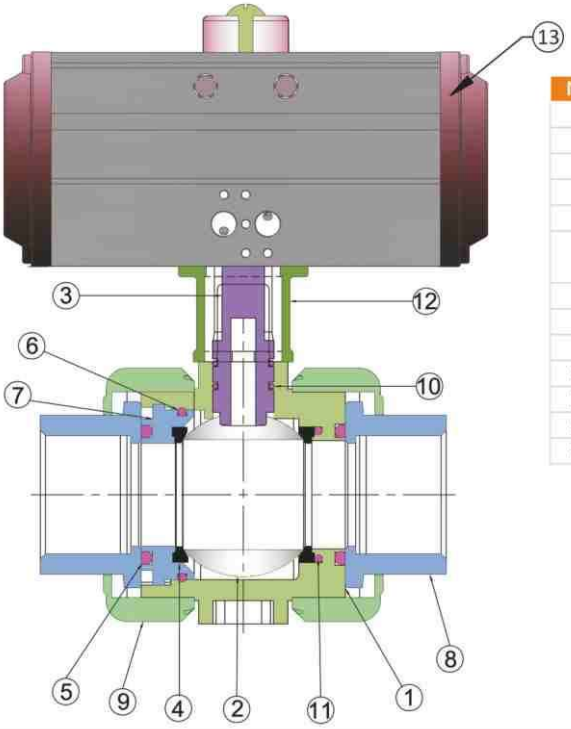

No.	DESCRIPTION	MATERIAL	QTY
1	Body	UPVC	01
2	Ball	UPVC	01
3	Stem	UPVC	01
4	Ball Seat	PTFE / EPDM / VITON	02
5	Body - 'O' Ring	NBR	02
6	Body Connector 'O' Ring	NBR	01
7	Body Connector	UPVC	01
8	Connector	UPVC	02
9	Connector Nut	UPVC	02
10	Stem 'O' Ring	NBR	01
11	Body 'O' Ring	NBR	01
12	Bracket	CF8 / CF8M	01
13	Actuator	STD.	01

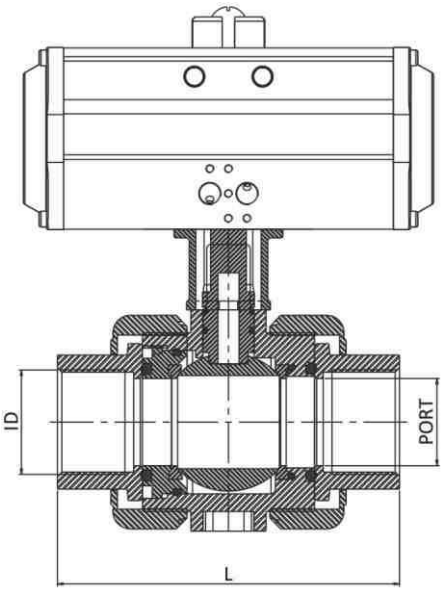

Dimensions : (All Dimensions are in mm)

Valve Model	Size		L	ID	PORT
	MM	Inch			
U2B - 15 - SD	15	1/2"	108.50	21.23	15
U2B - 20 - SD	20	3/4"	114.50	26.57	20
U2B - 25 - SD	25	1"	128	33.27	25
U2B - 32 - SD	32	1.1/4"	142	42	32
U2B - 40 - SD	40	1.1/2"	160	48	40
U2B - 50 - SD	50	2"	174	60.17	50
U2B - 65 - SD	65	2.1/2"	241	72.85	63
U2B - 80 - SD	80	3"	270	270	75

Note : Since, constant worldwide advancement in technology, We keep our rights reserved to make changes time to time in Technical specifications and Dimensions without prior notice.

Pub. on: January, 2015 (Rev.-01)

PNEUMATIC ROTARY ACTUATOR OPERATED

Incolan Spring Loaded Trunnion Mounted Ball Valve

Catalogue No.
APL / 2030

aira
VALVE AUTOMATION
ISO 9001 CO.

"aira"

offers Scotch and Yoke Actuator Operated Investment Casting WCB / CF8 / CF8M / CF3M Ball Valve In Two Piece Design.

Size Range : 6" to 16" Flanged End 150#

Standard :-

Design And Manufacturing	: BS EN ISO 17292 : 2004 (BS 5351)
Valve Face To Face Dimension	: ANSI B 16.10 / DIN 3202 / BSEN 558-1/2
Flange Standard Conformity	: ASME B 16.5 150#
Inspection & Testing	: BS EN 12266 - 1 & 2 (2003)
Top Flange Drilling	: ASA 150# / DIN 2632 & 2633 / BSEN 10 Table D, E, F (Customer Specified)

TEST PRESSURE

TESTING	BODY	SEAT
Hydraulic	20 KG/CM²	11 KG/CM²
Pneumatic Seat Pressure		6 KG/CM²
Spark Test - 15 KV D.C.		

Note : Upto 1500 Class available on request.

Accessories :

- On/off Indicator
- Namur Standard solenoid Valve in all Standard Coil Voltage (Flame Proof Solenoid Coil-request)
- Pneumatic & Electro - Pneumatic Valve Positioner
- Declutchable Manual Over -ride
- Limit Switches for On/off indication at Panel board
- Filter+Regulator Combination with Pressure Gauge
- Air Lock Valve

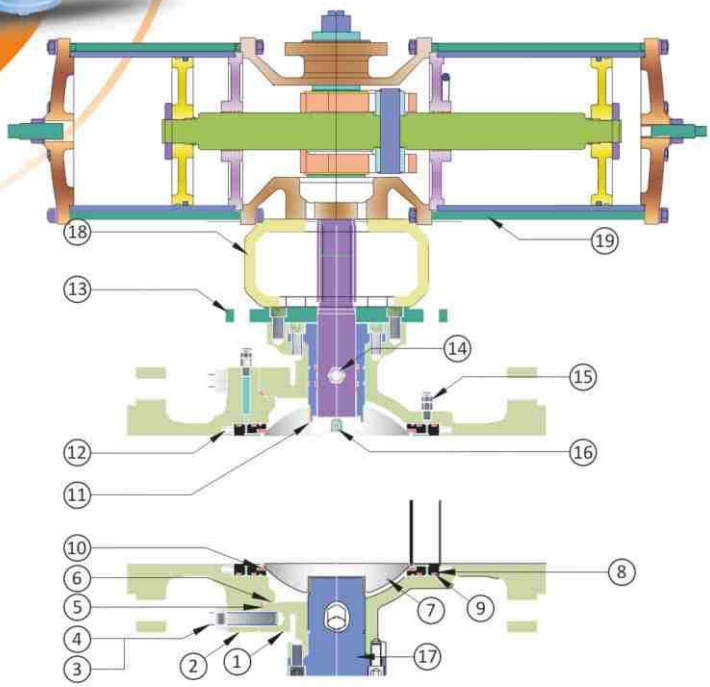

No.	DESCRIPTION	MATERIAL
1	Body	WCB / CF8 / CF8M
2	Bonnet	WCB / CF8 / CF8M
3	Bolts	A 193 B7
4	Nuts	A 194 2H
5	Gasket	S.S. 304 / Flexible graphite
6	O - Ring	Viton
7	Ball	CF8 / CF8M
8	Seat Retainer	A 105
9	Fire Safe Ring	Flexible graphite
10	Seal Ring	PTFE / GFT / CFT / TFM / PEEK
11	Stem Bearing	S. S. 304 + PTFE
12	Spring	S. S.
13	Connection Flange	A29 1025
14	Grease Valve	Assembly
15	Grease Valve	Assembly
16	Anti-static Spring	17 - 7 PH
17	Trunnion	A 105
18	Bracket	CF8 / CF8M
19	Actuator	STD.

Dimensions : (All Dimensions are in mm)

Valve Model	Size MM	Size Inch	ØA	L	ØD	ØK	Ød	b	N	ØJ
SRE-150-FD	150	6"	On Request							
SRE-2000-FD	200	8"	201	457	345	298.5	269.9	29	8	22.5
SRE-250-FD	250	10"	252	533	405	362	323.8	30.6	12	22.5
SRE-300-FD	300	12"	303	610	485	431.8	381	32.2	12	25.5
SRE-350-FD	350	14"	334	686	535	476.3	412.8	35.4	12	28.5
SRE-400-FD	400	16"	385	762	595	539.8	469.9	37	16	28.5

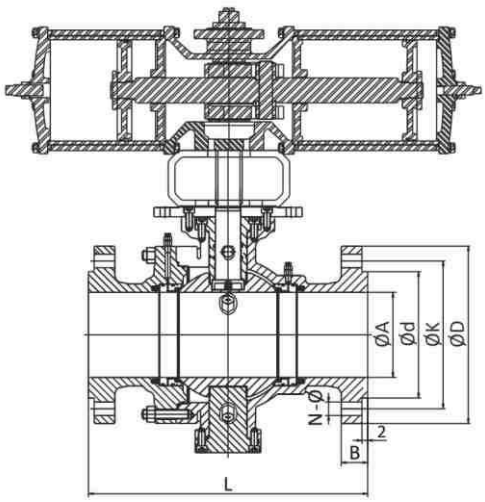

Note : Big Sizes Available On Request.

Note : Since, constant worldwide advancement in technology, We keep our rights reserved to make changes time to time in Technical specifications and Dimensions without prior notice.

Pub. on: January, 2015 (Rev.-01)

PNEUMATIC ROTARY ACTUATOR OPERATED

CW Series "C" Way 3 Way Ball Valve

Catalogue No.
APL / 2008

aira
VALVE AUTOMATION
ISO 9001 CO.

"aira"

offers ISO 5211 Standard Pneumatic Rotary Actuator Operated Investment Casting WCB / CF8 / CF8M / CF3M in 2 Piece Deign "C" Way Ball Valve - engineered for multiple ON / OFF Operation in the down stream.

Size Range : 1/2" to 8" Screwed / Flanged

Ball Valve Specification	
Type Of Valve Body & Ball	Full Port On / Off Type
Working Pressure	10 Bar
Working Temperature	Upto 180 °C Max.
Pressure Rating	150# / 300#
Leakage Class	Class VI
Working Fluid	Air, Water & Oil

Accessories :

- On / OFF Indicator
- NAMUR Standard Solenoid Valve in all Standard Coil Voltage (Flame Proof Solenoid Coil - on request)
- I/P Transducer (Convertor)
- Pneumatic valve positioner
- Electro Pneumatic Valve Positioner
- Declutchable Manual Over - Ride
- Limit Switch for On/ Off Indication at Panel board
- Filter + Regulator Combination with Pressure Gauge
- Air Lock Valve

Standard :-

Design And Manufacturing	: ASME B 16.34 / API 6D / BS EN ISO 17292
Valve Face To Face Dimension	: As Per Manufacturing / ASME B 16.1
Flange Standard Conformity	: ASME B 16.5 Class 150
Inspection & Testing	: API 598 / FCI - 70-2 / BS EN 12266 - 2 / API 6D

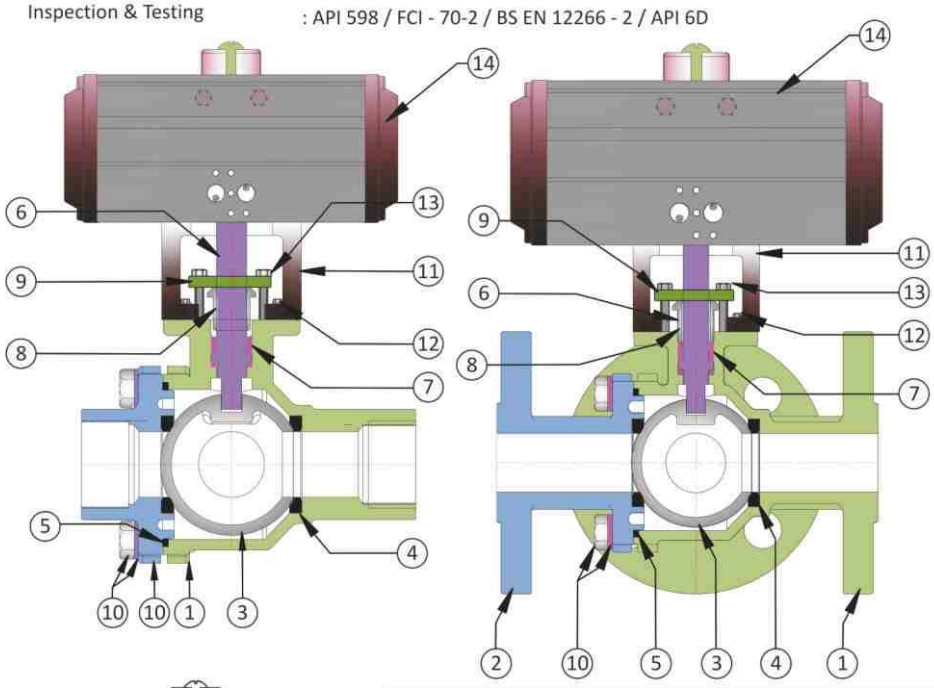

No.	DESCRIPTION	MATERIAL	QTY
1	Body	WCB / CF8 / CF8M	01
2	End Connection	WCB / CF8 / CF8M	01
3	Ball	CF8 / CF8M	01
4	Ball Seat	PTFE / GFT / CFT / TFM / PEEK	02
5	Body Seat	PTFE / GFT / CFT / TFM / PEEK	01
6	Stempin	S. S. 304 / 316	01
7	Stem Seat	PTFE / GFT / CFT / TFM / PEEK	05
8	Gland Bush	S. S. 304 / 316	01
9	Gland	CF8 / CF8M	01
10	Hex Bolt + Spring Washer	S. S. 304	04
11	Bracket	S. S. 304	01
12	Bracket Fitting Hex Bolt + Spring Washer	S. S. 304	04
13	Gland Hexbolt	S. S. 304	02
14	Actuator	STD	01

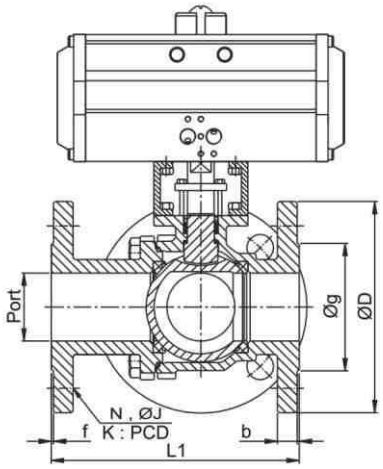

Dimensions : (All Dimensions are in mm)

Valve Model	Size MM	Size Inch	Port	L1	ØD	Øg	b	f	N	ØJ	PCD	Weigh Approx.
CWP - 15	15	1/2"	13	108	90	34.9	8.5	2	4	15.9	60.3	1.900
CWP - 20	20	3/4"	19	117	100	42.9	8.9	2	4	15.9	69.9	3.100
CWP - 25	25	1"	25	127	110	50.8	9.6	2	4	15.9	79.4	4.900
CWP - 40	40	1.1/2"	38	165	125	73	12.7	2	4	15.9	98.4	8.850
CWP - 50	50	2"	49	178	150	92.1	14.3	2	4	19.05	120.7	10.750
CWP - 65	65	2.1/2"	64	190	180	104.8	15.9	2	4	19.05	139.7	25.350
CWP - 80	80	3"	74	203	190	127	17.5	2	4	19.05	152.4	----
CWP - 100	100	4"	98	305	230	157.2	22.3	2	8	19.05	190.5	----
CWP - 125	125	5"	127	356	255	185.7	22.3	2	8	22.2	215.9	----
CWP - 150	150	6"	150	394	280	215.9	23.9	2	8	22.2	241.3	
CWP - 200	200	8"	201	600	345	269.9	27	2	8	22.2	298.5	

Note.: 300 & 600# Also Available

Note.: Big Sizes Also Available On Request.

Pub. on: January, 2015 (Rev.-01)

PNEUMATIC ROTARY ACTUATOR OPERATED

3 Way / 4 Way / 5 Way Ball Valve

Catalogue No.
AEA / 1007

aira
VALVE AUTOMATION
ISO 9001 CO.

"aira"

offers ISO 5211 Standard Pneumatic Rotary Actuator Operated "3, 4 & 5 Way" Design Investment Casting CF8 / CF8M / WCB Ball Valve, engineered for multiple Diverting / Mixing Operations in the down stream. TYPE : "T" . PORT / "L" . PORT / "X" . PORT In Full Bore / Reduce Bore

Size Range : 1/2" to 4" Screwed / Flanged / Triclover End

Features :

- Body & End are Investment Casting
- Self adjusting stem packing
- Available in 3 Way / 4 Way / 5 Way L - Port / T - Port / X - Port
- 4 Piece Ball Seats
- Blow - Out Proof Stem Design / Anti Blow - Out Proof Stem Design
- 100% air tested under water at 80 - 100 PSI

Accessories :

- On / OFF Indicator
- NAMUR Standard Solenoid Valve in all Standard Coil Voltage (Flame Proof Solenoid Coil - on request)
- Pneumatic & Electro Pneumatic valve positioner
- Declutchable Manual Over - Ride
- Limit Switch for On/ Off Indication at Panel board
- Filter + Regulator Combination with Pressure Gauge
- Air Lock Valve

Standard :-

Design And Manufacturing	: ASME B 16.34 / BS EN 12516 - 1
Valve Face To Face Dimension	: As Per Manufacturing
Flange Standard Conformity	: ASME B 16.5 Class 150
Inspection & Testing	: API 598 / FCI - 70-2 / BS EN 12266 - 1 ISO 5208

Ball Valve Specification	
Pressure Rating	ASME 150 / ASME 300 PN 16, PN 25, PN 40
Temperature Range	Upto -25°C to 180 °C Max.

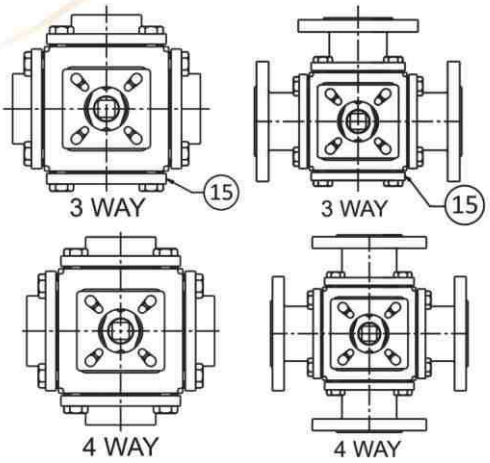

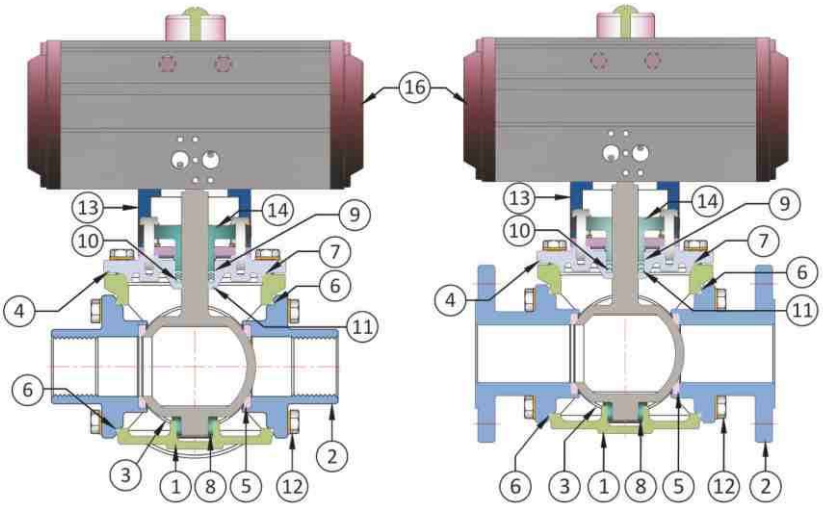

FLOW PATTERNS

3-WAY

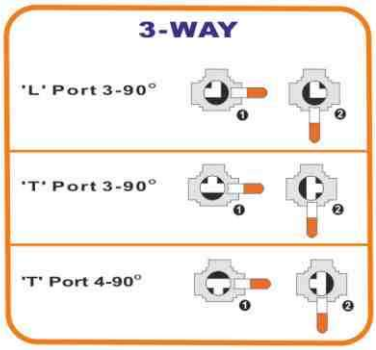

FLOW PATTERNS

4-WAY

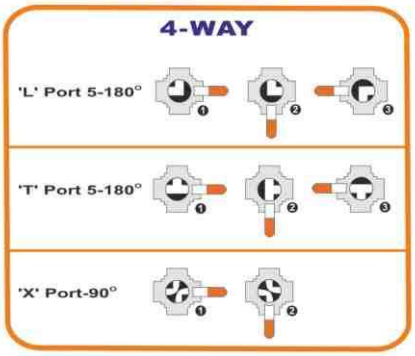

No.	DESCRIPTION	MATERIAL	QTY
1	Body	WCB / CF8 / CF8M	01
2	Connector	CF8 / CF8M	04
3	Ball	CF8 / CF8M	01
4	Top Cover	CF8 / CF8M	01
5	Ball Seat	PTFE / GFT / CFT / PEEK / TFM	04
6	Body Seat	PTFE / GFT / CFT / PEEK / TFM	04
7	Top Cover Seat	PTFE / GFT / CFT / PEEK / TFM	01
8	T - Bush	S. S. / Field	01
9	U - Seat	PTFE / GFT / CFT / PEEK / TFM	01
10	V - Seat	PTFE / GFT / CFT / PEEK / TFM	01
11	Base V - Seat	PTFE / GFT / CFT / PEEK / TFM	01
12	Stud + Nut + Washer	S. S. 304	16
13	Bracket	S. S. 304	02
14	Gland With Bush	CF8 / CF8M	01
15	Blind Cap	CF8 / CF8M	01
16	Actuator	STD.	01

Pub. on: January, 2015 (Rev.-01)

Screwed / Flanged

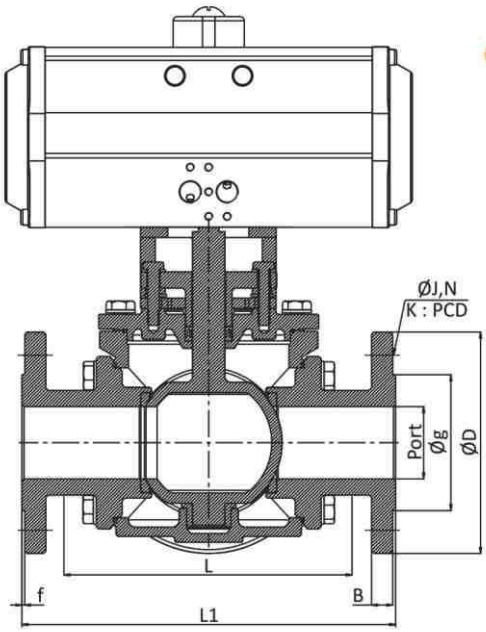

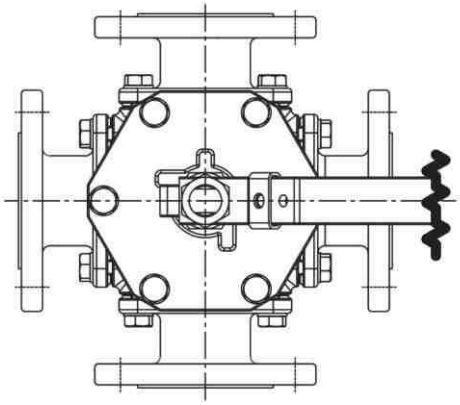

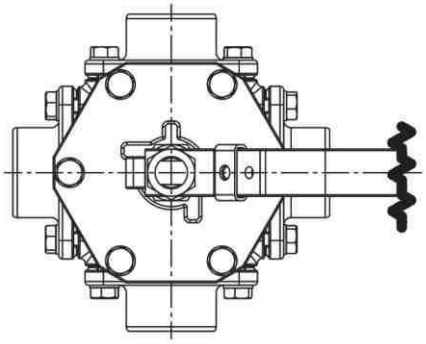

Dimensions : (All Dimensions are in mm)

Valve Model	Valve Size		Screwed		Flanged 150#									Weight (Approx)	Flanged 300#								K:PCD
	MM	Inch	L	Weight	L1	b	f	Port	Øg	ØD	N	ØJ	K:PCD		L1	b	f	Port	Øg	ØD	ØJ	N	
SUZ-503-15	15	1/2"	104	2.250	152	8	2	11	34.9	90	4	15.9	60.3	4.440	150	12.7	2	15	34.9	95	15.9	4	66.7
SUZ-503-20	20	3/4"	111	3.050	165	8.9	2	20	42.9	100	4	15.9	69.9	5.800	177	14.3	2	19	42.9	115	19.05	4	82.6
SUZ-503-25	25	1"	130	4.350	192	9.6	2	25	50.8	110	4	15.9	79.4	7.650	202	15.9	2	25	50.8	125	19.05	4	88.9
SUZ-503-32	32	1.1/4"	138	5.050	208	11.2	2	32	63.5	115	4	15.9	88.9	—	208	17.5	2	32	63.5	135	19.05	4	98.4
SUZ-503-40	40	1.1/2"	158	10.100	220	12.7	2	38	73	125	4	15.9	98.4	15.600	234	19.1	2	38	73	155	22.2	4	114.3
SUZ-503-50	50	2"	190	16.500	253.5	14.3	2	49	92.1	150	4	19.05	120.7	26.450	274	18.70	2	49	92.1	165	19.05	8	127
SUZ-503-65	65	2.1/2"	304	----	295	15.9	2	64	104.8	180	4	19.05	139.7	35.200	330	23.9	2	62	104.8	190	22.2	8	149.2
SUZ-503-80	80	3"	320	----	306	17.5	2	77	127	190	4	19.05	152.4	46.300	332	27	2	74	127	210	22.2	8	168.3
SUZ-503-100	100	4"	368	----	371	22.3	2	98	157.2	230	8	19.05	190.5	80.050	395	30.2	2	100	157.2	255	22.2	8	200
SUZ-503-125	125	5"	–	----	—	22.3	2	125	185.7	255	8	22.2	215.9	82.100	–	33.4	2	125	185.7	280	22.2	8	235
SUZ-503-150	150	6"	--	----	428	23.9	2	150	215.9	280	8	22.2	241.3	----	468	35	2	150	215.9	320	22.2	12	269.9

Triclover End

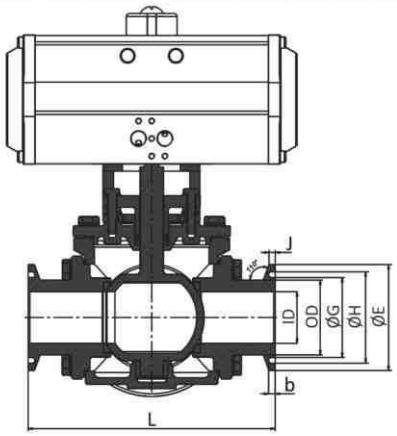

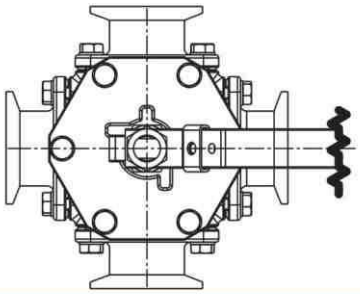

Dimensions : (All Dimensions are in mm)

Valve Model	Valve Size		L	ØE	ØG	ØH	ID	OD	J	B
	MM	Inch								
SUZ - 503 T 15	15	1/2"	133	34	25.5	29.5	12.5	18.5	2.8	1.5
SUZ - 503 T 20	20	3/4"	140	34	25.5	29.5	17	23	2.8	1.5
SUZ - 503 T 25	25	1"	160	50.5	42	46	24	31	2.8	1.5
SUZ - 503 T 40	40	1.1/2"	183	50.5	42	46	32	41	2.8	1.5
SUZ - 503 T 50	50	2"	217	64	55.5	59.5	42.5	52.5	2.8	1.5

Note : Since, constant worldwide advancement in technology, We keep our rights reserved to make changes time to time in Technical specifications and Dimensions without prior notice.

Pub. on: January, 2015 (Rev.-01)

PNEUMATIC ROTARY ACTUATOR OPERATED

3 Way / 4 Way Ball Valve

Catalogue No.
APL / 2006

aira
VALVE AUTOMATION
ISO 9001 CO.

"aira"

offers ISO 5211 Standard Pneumatic Rotary Actuator Operated "3 Way - 4 Way" Design CF8 / CF8M / WCB Ball Valve, engineered for multiple Diverting / Mixing Operations in the down stream. TYPE : "T" . PORT / "L" . PORT / "X" . PORT In Full Bore / Reduce Bore

Size Range : 6" to 12" Flange End

Standard :-

Design And Manufacturing	: ASME B 16.34 / API 6D
Valve Face To Face Dimension	: As Per Manufacturing
Flange Standard Conformity	: ASME B 16.5 Class 150, 300
Inspection & Testing	: API 598 / BS EN 12266 - 1

Ball Valve Specification	
Working Pressure	ASME B16.5 150 / 300
Working Temperature	Upto -25°C to 180 °C Max.

Note.: High Temperature available on request.

Accessories :

- On / OFF Indicator
- NAMUR Standard Solenoid Valve in all Standard Coil Voltage (Flame Proof Solenoid Coil - on request)
- Pneumatic & Electro Pneumatic valve positioner
- Declutchable Manual Over - Ride
- Limit Switch for On/ Off Indication at Panel board
- Filter + Regulator Combination with Pressure Gauge
- Air Lock Valve

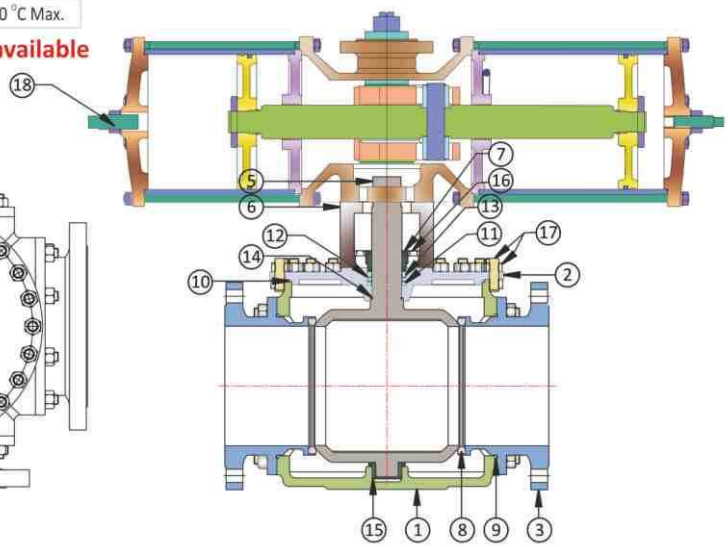

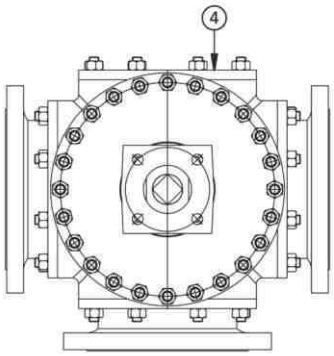

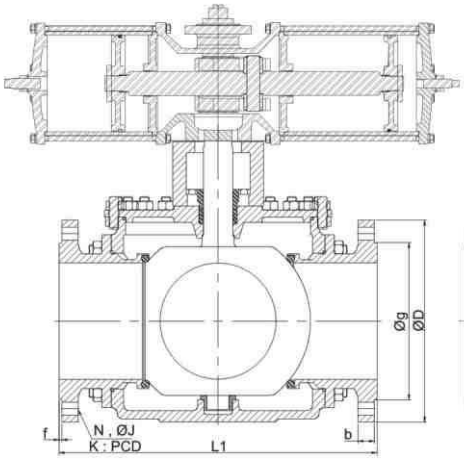

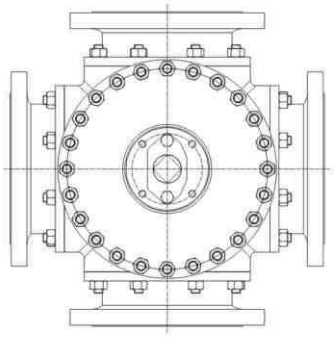

No.	DESCRIPTION	MATERIAL
1	Body	WCB / CF8 / CF8M
2	Top Cover	WCB / CF8 / CF8M
3	Flange End	WCB / CF8 / CF8M
4	Blind End	WCB / CF8 / CF8M
5	Ball	CF8 / CF8M
6	Bracket	CF8 / CF8M
7	Gland	CF8 / CF8M
8	Ball Seat	PTFE
9	Body Gasket	PTFE
10	Top Cover Gasket	PTFE
11	Base Seal	PTFE
12	U - Seal	PTFE
13	V - Seal	PTFE
14	'O' - Ring	Viton
15	Bush	CFT / PTFE
16	Bracket & Gland Fitting Bolt	M. S. / S.S.
17	Fitting Stud + Nut	M. S.
18	Actuator	STD.

Dimensions : (All Dimensions are in mm)

Valve Model	Size		BORE	L1	ØD	b	Øg	f	ØJ	N	PCD
	MM	Inch									
SUZ-403-F-150	150	6"	150	437	280	23.9	275.9	2	22.2	8	241.3
SUZ-403-F-200	200	8"	200	538	345	28	268.7	2	22.2	12	298.5
SUZ-403-F-250	250	10"	250	662	405	28.6	323.8	2	25.4	12	362.00
SUZ-403-F-300	300 (R/Bore)	12" (R/Bore)	250	662	485	30.2	381	2	25.4	12	431.8

Note : Since, constant worldwide advancement in technology, We keep our rights reserved to make changes time to time in Technical specifications and Dimensions without prior notice.

Pub. on: January, 2015 (Rev.-01)

aira®

VALVE AUTOMATION
ISO 9001 CO.

SERIES : C

Pneumatic Rotary Actuator Operated Butterfly Valve

FIRE SAFE DESIGN

SEALS

PTFE / RPTFE / GFT / CFT / EPDM
NBR / VITON / HYPELON / NEOPREN
FEP / PFA / METAL TO METAL

- Center Disc / Offset Disc
  Double Eccentric / Triple Eccentric
  High Temperature / High Pressure
- Size Range : Upto 1.1/2" to 110" also available

IBR

PNEUMATIC ROTARY ACTUATOR OPERATED

Wafer Type Butterfly Valve

Catalogue No.
APL / 1008

aira
VALVE AUTOMATION
ISO 9001 CO.

"aira"

offers rubber lined Butterfly Valve for HVAC & utilities. These Valves are truly 'Fit & Forget Valve', Which requires minimum maintenance. The body lines which also function as the soft seat, comes in integrally molded version & offers bi - directional sealing against vacuum upto the pressure of PN 10 / 16

Size Range : 1.1/2" to 48"

Butterfly Valve Specification	
Valve Type	Centric Disc Butterfly Valve with Single Piece Rubber Lined Body
Body Type	Short Wafer Type
Seat Type	Integrally Molded with The Body (Renewable Seat On Request)
End Connection	Wafer Type Suit 150#, Table 'D', Table 'E' & IS 6392 Table 11 (PN 10 / PN 16)
Pressure Rating	PN 10 / PN 16 (PN 20 On Request)
Oper. Temp. Range	-20 °C to 80 °C For Nitrile Seat (Depending On MOC)
Seat Leakage	Tight Shut Off

Accessories :

- On / OFF Indicator
- NAMUR Standard Solenoid Valve in
- all Standard Coil Voltage (Flame Proof Solenoid Coil - On Request)
- Pneumatic & Electro-Pneumatic valve positioner
- Declutchable Manual Over - Ride
- Limit Switches for On / Off Indication at Panel Board
- Filter + Regulator Combination with Pressure Gauge
- Air Lock Valve

Item	Type Of Test	Testing Pressure	Operating Temperature (Normal)	Operating Temperature (High)
Actuator	Pneumatic Bubble Test	180 To 150 PSIG	-20 °C to 80 °C	High Temp. On Request
Valve Body	Hydraulic	225 PSIG	Max. 80 °C	High Temp. On Request
Seat	Hydraulic	150 PSIG	Max. 80 °C	High Temp. On Request

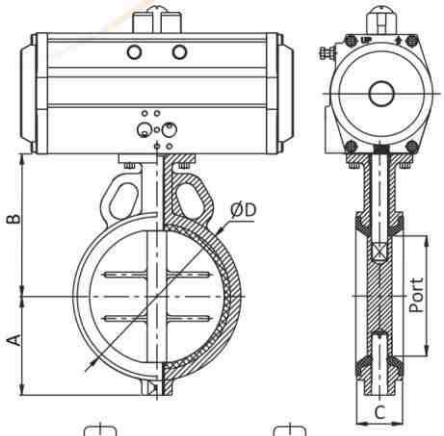

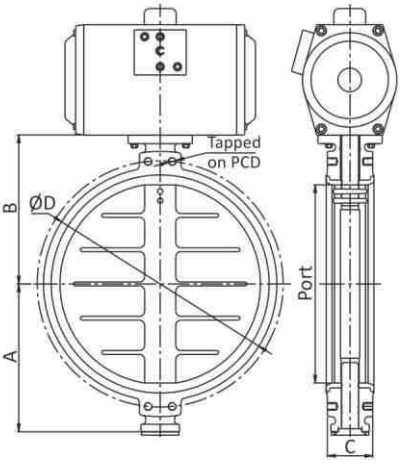

Dimensions : (All Dimensions are in mm)

Valve Model	Valve Size MM	Valve Size Inch	Port ±5MM	A ±5MM	B ±5MM	C ±2MM	ØD ±5MM	PCD ±0.5MM	Tapped	Weight (Approx.) Kgs.
ECO - IC - 40	40	1.1/2"	40	61	106	34	80	----	----	3
ECO - IC - 50	50	2"	50	65	121	44	95	----	----	3.25
ECO - IC - 65	65	2.1/2"	65	71	124	46	108	----	----	5
ECO - IC - 80	80	3"	80	80	130	46	124	----	----	5.25
ECO - IC - 100	100	4"	100	98.5	146.5	52	150	----	----	6.5
ECO - IC - 125	125	5"	125	112.5	162	56	186	----	----	10.6
ECO - IC - 150	150	6"	150	125	177	56	205	----	----	11.5
ECO - IC - 200	200	8"	200	152.5	202	60	258.5	----	----	20
ECO - IC - 250	250	10"	241	193	262	68	316	----	----	24.900
ECO - IC - 300	300	12"	286	218	287	78	365	----	----	33.500
ECO - IC - 350	350	14"	333	255	332	78	435	----	----	43
ECO - IC - 400	400	16"	382	310	363	102	488	----	----	63
ECO - IC - 450	450	18"	433	340	388	114	540	577.9	1" UNC	94
ECO - IC - 500	500	20"	476	370	425	127	600	635	1" UNC	124.30
ECO - IC - 600	600	24"	590	449	495	154	695	749.3	1.1/4" UNC	241.5
ECO - IC - 650	650	26"	635	455	490	165	740	806.4	1.1/4" UNC	215
ECO - IC - 700	700	28"	680	488	553	165	799	863.6	1.1/4" UNC	278.150
ECO - IC - 750	750	30"	725	538	593	190	857	914.4	1.1/4" UNC	338.300
ECO - IC - 800	800	32"	785	570	630	190	912	977.9	1.1/2" UNC	387.100
ECO - IC - 850	850	34"	810	----	----	190	1000	1028.7	1.1/2" UNC	----
ECO - IC - 900	900	36"	885	685	705	203	1025	1085.8	1.1/2" UNC	484.8
ECO - IC - 950	950	38"	935	694	715	216	1090	1149.4	1.1/2" UNC	-----
ECO - IC - 1000	1000	40"	965	718	738	216	1131	1200.2	1.1/2" UNC	-----
ECO - IC - 1100	1100	44"	1085	----	----	254	1245	1314.45	1.1/2" UNC	-----
ECO - IC - 1200	1200	48"	1170	855	870	254	1350	1422.4	1.1/2" UNC	-----

Note : Since, constant worldwide advancement in technology, We keep our rights reserved to make changes time to time in Technical specifications and Dimensions without prior notice.

Pub. on: January, 2015 (Rev.-01)

VALVE AUTOMATION
ISO 9001 CO.

Standard :-

Design And Manufacture	: API 609 category A / IS . 13095 / BS EN 593
Valve Face To Face Dimension	: Short Wafer As Per ISO 5752 TAB 5 / API 609 Category A ISO 5752 TAB 1 (BS 5155)
Flange Standard Conformity	: ASME B16.5 / 16.47 Series A Class 150, BS 10 TAB D, E & F
Inspection & Testing	: API 598 / BS EN 12266 - 1
Top Flange Driling	: ISO 5211

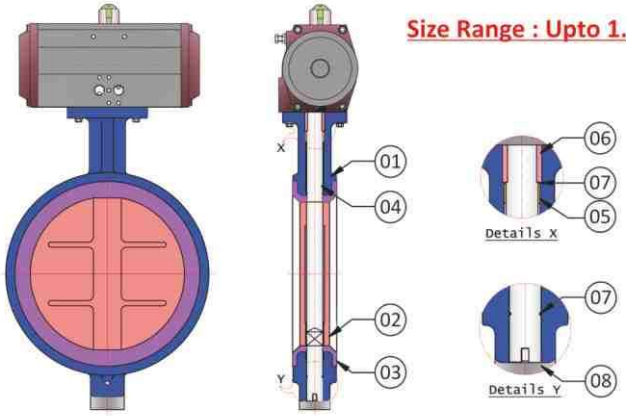

Size Range : Upto 1.1/2" to 3"

No.	DESCRIPTION	MATERIAL
1	Body	ASTM - A 126 Grade B (Gray Iron) ASTM - A 216 Grade WCB (Cast Iron) ASTM - A 536 Grade 65-45-12 (Ductile Iron) ASTM - A 351 Grade CF8 / CF8M / CF3M / CD4MCuN
2	Disc	ASTM - A 126 Grade B (Gray Iron) + Powder Coated ASTM - A 216 Grade WCB (Cast Iron) + Powder Coated ASTM - A 536 Grade 65-45-12 (Ductile Iron) + Powder Coated ASTM - A 351 Grade CF8 / CF8M / CF3M / CD4MCuN S.G.Iron with Teflon / Powder / Nylon Coated & Rubber Line
3	Seat	Nitrile / EPDM / Viton / Hypelon / Neopren
4	Shaft	AISI 410 / AISI 304 / AISI 316 / AISI 316L
5	Bearing Bush	Metal Bush PTFE Coated
6	Bush	Delrin
7	'O' Ring	Nitrile / EPDM / Viton / Hypelon / Neopren
8	Dowel Pin	M.S. / AISI 304 / AISI 316 / AISI 316L

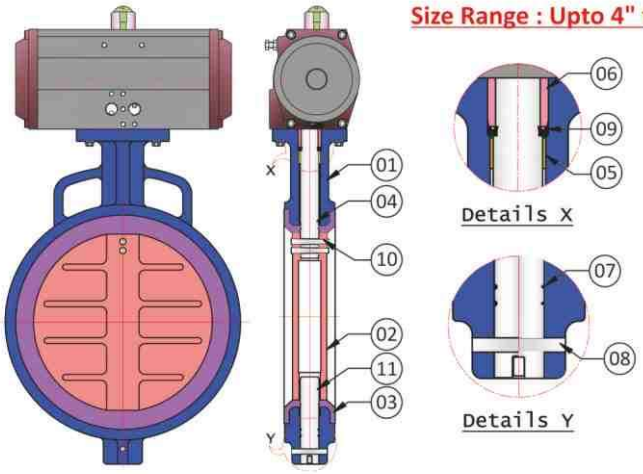

Size Range : Upto 4" to 16"

No.	DESCRIPTION	MATERIAL
1	Body	ASTM - A 126 Grade B (Gray Iron) ASTM - A 216 Grade WCB (Cast Iron) ASTM - A 536 Grade 65-45-12 (Ductile Iron) ASTM - A 351 Grade CF8 / CF8M / CF3M / CD4MCuN
2	Disc	ASTM - A 126 Grade B (Gray Iron) + Powder Coated ASTM - A 216 Grade WCB (Cast Iron) + Powder Coated ASTM - A 536 Grade 65-45-12 (Ductile Iron) + Powder Coated ASTM - A 351 Grade CF8 / CF8M / CF3M / CD4MCuN S.G.Iron with Teflon / Powder / Nylon Coated & Rubber Line
3	Seat	Nitrile / EPDM / Viton / Hypelon / Neopren
4	Shaft	AISI 410 / AISI 304 / AISI 316 / AISI 316L
5	Bearing Bush	Metal Bush PTFE Coated
6	Bush	PTFE (Teflon)
7	'O' Ring	Nitrile / EPDM / Viton / Hypelon / Neopren
8	Dowel Pin	M.S. / AISI 304 / AISI 316 / AISI 316L
9	'V' Seal	Nitrile / EPDM / Viton / Hypelon / Neopren
10	Taper Pin	AISI 304 / AISI 316 / AISI 316L
11	Bottom Pin	AISI 410 / AISI 304 / AISI 316 / AISI 316L

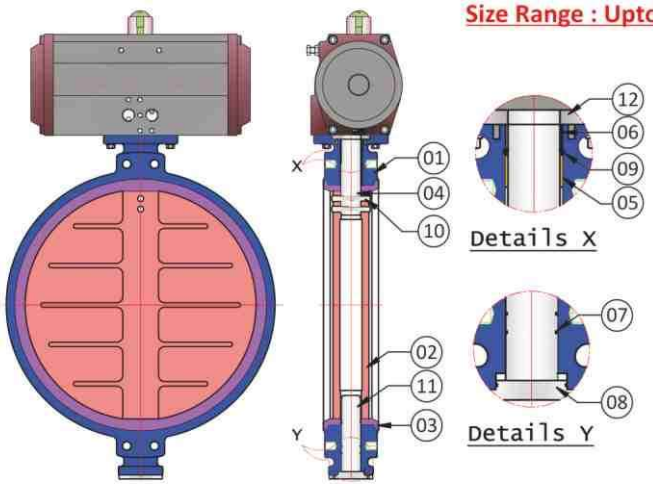

Size Range : Upto 18" to 48"

No.	DESCRIPTION	MATERIAL
1	Body	ASTM - A 126 Grade B (Gray Iron) ASTM - A 216 Grade WCB (Cast Iron) ASTM - A 536 Grade 65-45-12 (Ductile Iron) ASTM - A 351 Grade CF8 / CF8M / CF3M / CD4MCuN
2	Disc	ASTM - A 126 Grade B (Gray Iron) + Powder Coated ASTM - A 216 Grade WCB (Cast Iron) + Powder Coated ASTM - A 536 Grade 65-45-12 (Ductile Iron) + Powder Coated ASTM - A 351 Grade CF8 / CF8M / CF3M / CD4MCuN S.G.Iron with Teflon / Powder / Nylon Coated & Rubber Line
3	Seat	Nitrile / EPDM / Viton / Hypelon / Neopren
4	Shaft	AISI 410 / AISI 304 / AISI 316 / AISI 316L
5	Bearing Bush	Metal Bush PTFE Coated
6	Bush	PTFE (Teflon)
7	'O' Ring	Nitrile / EPDM / Viton / Hypelon / Neopren
8	Bottom Plate	IS 2062 Gr. B
9	'V' Seal	Nitrile / EPDM / Viton / Hypelon / Neopren
10	Taper Pin	AISI 304 / AISI 316 / AISI 316L
11	Bottom Pin	AISI 410 / AISI 304 / AISI 316 / AISI 316L
12	Gland Plate	IS 2062 Gr. B

Pub. on: January, 2015 (Rev.-01)

PNEUMATIC ROTARY ACTUATOR OPERATED

Wafer Type Double Flange Butterfly Valve

Catalogue No.
APL / 1055

aira
VALVE AUTOMATION
ISO 9001 CO.

"aira"

offers rubber lined Butterfly Valve for HVAC & utilities. These Valves are truly 'Fit & Forget Valve', Which requires minimum maintenance. The body lines which also function as the soft seat, comes in integrally molded version & offers bi - directional sealing against vacuum upto the pressure of PN 10 / 16 / PN 0.6 / 10 / 1.6 / PN 20

Size Range : 3" to 48"

Butterfly Valve Specification	
Valve Type	Centric Disc Butterfly Valve with Single Piece Rubber Lined Body
Body Type	Short Wafer Type Double Flange
Seat Type	Integrally Molded with The Body (Renewable Seat On Request)
End Connection	Wafer Type Suit 150#, Table 'D', Table 'E' & IS 6392 Table 11 (PN 10 / PN 16)
Pressure Rating	PN 10 / PN 16 (PN 20 On Request)
Oper. Temp. Range	-20 °C to 80 °C For Nitrile Seat (Depending On MOC)
Seat Leakage	Tight Shut Off

TEST PRESSURE		
Testing	Body	Seat
Hydraulic	16 Kg/cm^2	10 Kg/cm^2

Accessories :

- On / OFF Indicator
- NAMUR Standard Solenoid Valve in
- all Standard Coil Voltage (Flame Proof Solenoid Coil - On Request)
- Pneumatic & Electro-Pneumatic valve positioner
- Declutchable Manual Over - Ride
- Limit Switches for On / Off Indication at Panel Board
- Filter + Regulator Combination with Pressure Gauge
- Air Lock Valve

Note : (Valve F to F will be as per Wafer type) (Flange Thickness Non - STD As per Mfg. Std Wafer short Double Flange Body)

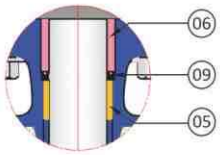

Details X

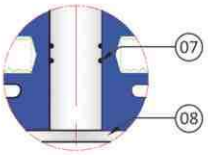

Details Y

No.	DESCRIPTION	MATERIAL
1	Body	ASTM - A 126 Grade B (Gray Iron) ASTM - A 216 Grade WCB (Cast Iron) ASTM - A 536 Grade 65-45-12 (Ductile Iron) ASTM - A 351 Grade CF8 / CF8M / CF3M / CD4MCuN
2	Disc	ASTM - A 126 Grade B (Gray Iron) + Powder Coated ASTM - A 216 Grade WCB (Cast Iron) + Powder Coated ASTM - A 536 Grade 65-45-12 (Ductile Iron) + Powder Coated ASTM - A 351 Grade CF8 / CF8M / CF3M / CD4MCuN S.G.Iron with Teflon / Powder / Nylon Coated & Rubber Line
3	Seat	Nitrile / EPDM / Viton / Hypelon / Neopren
4	Shaft	AISI 410 / AISI 304 / AISI 316 / AISI 316L
5	Bearing Bush	Metal Bush PTFE Coated
6	Bush	PTFE (Teflon)
7	'O' Ring	Nitrile / EPDM / Viton / Hypelon / Neopren
8	Bottom Plate	IS 2062 Gr. B
9	'V' Seal	Nitrile / EPDM / Viton / Hypelon / Neopren
10	Taper Pin	AISI 304 / AISI 316 / AISI 316L
11	Bottom Pin	AISI 410 / AISI 304 / AISI 316 / AISI 316L

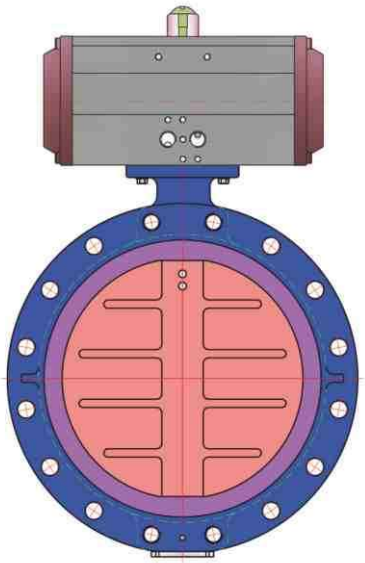

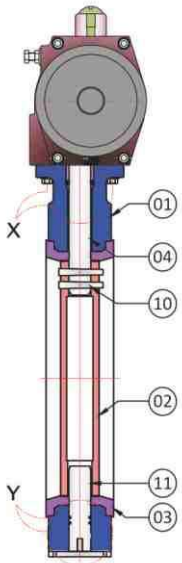

Note : Since, constant worldwide advancement in technology, We keep our rights reserved to make changes time to time in Technical specifications and Dimensions without prior notice.

Pub. on: January, 2015 (Rev.-01)

Standard :-

Design And Manufacturer	: API 609 category A / IS : 13095 / BS EN 593
Valve Face To Face Dimension	: Short Wafer As Per ISO 5752 TAB 5 / API 609 Category A ISO 5752 TAB 1
Flange Standard Conformity	: ASME B 16.5 / ASME B 16.47 Class 150, BS 10 TABLE D, E & F *Flange Thickness Non - STD As per Mfg. STD (Wafer Short Double Flange Body)
Inspection & Testing	: API 598 / BS EN 12266 - 1
Top Flange Driling	: ISO 5211

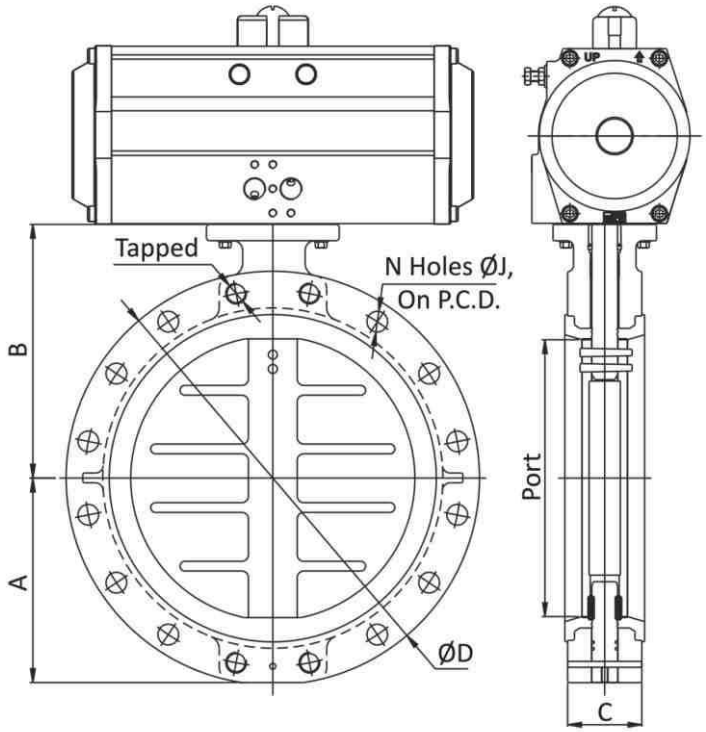

Dimensions : (All Dimensions are in mm)

Valve Model	Valve Size		Port	A	B	C	ØD	N	ØJ	Tapped	PCD
	MM	Inch	±1 MM	±5 MM	±5 MM	±2 MM	±5 MM		±1 MM		±0.5 MM
DFW-ECO-80	80	3"	80	95	129	46	190	4	19.05	–	152.4
DFW-ECO-100	100	4"	100	113	147	52	230	8	19.05	--	190.5
DFW-ECO-150	150	6"	150	136	177	56	280	8	22.2	--	241.3
DFW-ECO-200	200	8"	200	174	214	60	345	8	22.2	--	298.5
DFW-ECO-250	250	10"	241	212	275	68	405	12	25.4	--	362
DFW-ECO-300	300	12"	286	241	305	78	485	12	25.4	--	431.8
DFW-ECO-350	350	14"	333	271	341	78	535	12	28.6	--	476.3
DFW-ECO-400	400	16"	382	300	365	102	595	16	28.6	--	539.8
DFW-ECO-450	450	18"	433	318	405	114	635	16	31.75	1" UNC	577.9
DFW-ECO-500	500	20"	476	353	430	127	700	20	31.75	1" UNC	635
DFW-ECO-600	600	24"	590	420	525	154	815	20	34.9	1.1/4" UNC	749.3
DFW-ECO-650	650	26"	635	----	----	165	870	24	34.9	1.1/4" UNC	806.4
DFW-ECO-700	700	28"	680	465	545	165	925	28	34.9	1.1/4" UNC	863.6
DFW-ECO-750	750	30"	725	486	577	190	985	28	34.9	1.1/4" UNC	914.4
DFW-ECO-800	800	32"	785	----	-----	190	1060	28	41.3	1.1/2" UNC	977.9
DFW-ECO-900	900	36"	885	----	-----	203	1170	32	41.3	1.1/2" UNC	1085.8
DFW-ECO-1000	1000	40"	965	----	-----	216	1290	36	41.3	1.1/2" UNC	1200.2
DFW-ECO-1200	1200	48"	1170	758	870	254	1510	44	41.3	1.1/2" UNC	1422.4

Note : Since, constant worldwide advancement in technology, We keep our rights reserved to make changes time to time in Technical specifications and Dimensions without prior notice.

Pub. on: January, 2015 (Rev.-01)

PNEUMATIC ROTARY ACTUATOR OPERATED

Wafer Type Damper Valve

Catalogue No.
APL / 1051

aira
VALVE AUTOMATION
ISO 9001 CO.

"aira"

offers ISO 5211 Standard Pneumatic Rotary Actuator Operated Flow Control Application Of Air & gas.

Size Range : 1.1/2" to 20"

Butterfly Valve Specification	
Valve Type	Wafer Type Damper Valve with Metal to Metal
Body Type	Short Wafer Type (Sandwiched between flanges) Damper
Seat Type	Metal to Metal
End Connection	Wafer Sandwiched (Lug Type On Request)
Pressure Rating	PN 6 (Maximum)
Oper. Temp. Range	-25 °C to 400 °C (Depending On MOC) Upto 600 °C
Seat Leakage	5% Leakage of full flow (Class 1 Available On Request)

TEST PRESSURE		
Testing	Body	Seat
Hydraulic	10 Kg/cm²	5% Leakage

Accessories :

- On / OFF Indicator
- NAMUR Standard Solenoid Valve in
- all Standard Coil Voltage (Flame Proof Solenoid Coil - On Request)
- Pneumatic & Electro-Pneumatic valve positioner
- Declutchable Manual Over - Ride
- Limit Switches for On / Off Indication at Panel Board
- Filter + Regulator Combination with Pressure Gauge
- Air Lock Valve

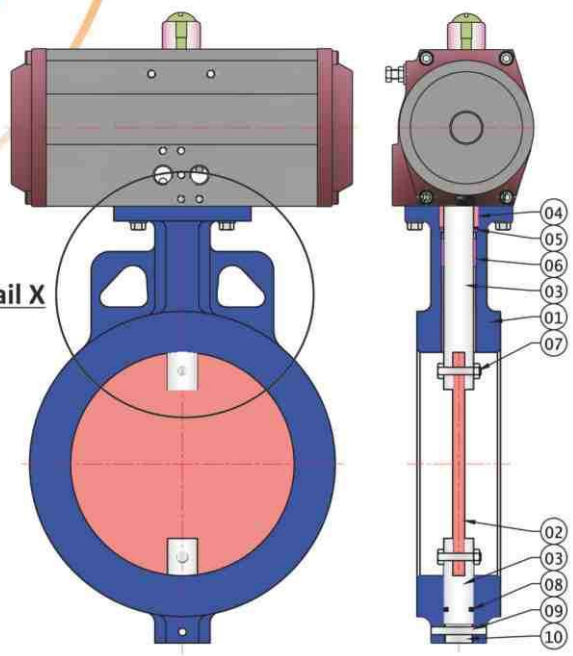

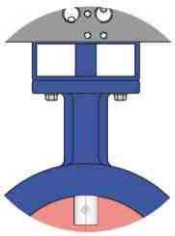

Detail X
Size 1.1/2" to 8"

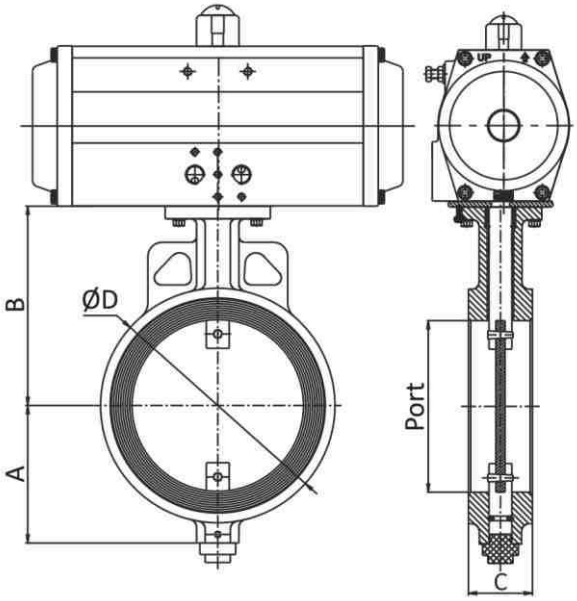

No.	DESCRIPTION	MATERIAL
1	Body	ASTM - A 126 Grade B (Gray Iron) ASTM - A 216 Grade WCB (Cast Iron) ASTM - A 536 Grade 65-45-12 (Ductile Iron) ASTM - A 351 Grade CF8 / CF8M / CF3M / CD4MCuN
2	Disc	IS 2062 Gr. B with Powder Coated AISI 304 / 316 / 316L with Powder Caoted
3	Shaft	AISI 410 / AISI 304 / AISI 316 / AISI 316L
4	Teflon Bush	Teflon
5	Gland Ring	Graphite
6	Bering Bush	Metal Bush PTFE Coated
7	Nut & Bolt	S. S. 202 / S. S. 304
8	Bottom Ring	Graphite
9	Dowel Pin	IS 2062 Gr. B
10	Bottom Cover	IS 2062 Gr. B

Dimensions : (All Dimensions are in mm)

Valve Model	Valve Size MM	Valve Size Inch	Port ±1 MM	A ±5 MM	B ±5 MM	C ±2 MM	ØD ±5 MM
DP - 40	40	1.1/2"	40	55.5	81.5	33.5	85
DP - 50	50	2"	50	60.5	100	43.5	80
DP - 65	65	2.1/2"	65	68	107.5	46	102
DP - 80	80	3"	80	75.5	115	46	125
DP - 100	100	4"	100	85.5	125	52	139
DP - 125	125	5"	125	108.5	167.5	56	168
DP - 150	150	6"	150	121	180	56	204
DP - 200	200	8"	200	146	205	60	252
DP - 250	250	10"	245	221	271	68	316
DP - 300	300	12"	295	252	296	78	362
DP - 350	350	14"	340	271	312	78	405
DP - 400	400	16"	388	300	365	102	470
DP - 450	450	18"	450	332	368	90	540
DP - 500	500	20"	490	377	420	90	595

Note : Big Sizes also available.

Note : Since, constant worldwide advancement in technology, We keep our rights reserved to make changes time to time in Technical specifications and Dimensions without prior notice.

Pub. on: January, 2015 (Rev.-01)

PNEUMATIC ROTARY ACTUATOR OPERATED

Double Flange Fabricated Damper Valve

Catalogue No.
APL / 2014

aira®
VALVE AUTOMATION
ISO 9001 CO.

"aira"

offers ISO 5211 Standard Pneumatic Rotary Actuator Operated Double Flange Fabricated Damper Valve

Size Range : 8" to 80"

Valve Specification	
Valve Type	Centric Disc Damper Valve
Body Type	Double Flange
Seat Type	Metal to Metal
End Connection	PN 6,EN 1092 - 1 (ASME B 16.47 Series B)
Pressure Rating	5Kg/cm^2
Oper. Temp. Range	Upto 450 °C
Seat Leakage	5% Leakage Of Main Flow (Class - 1 Available On Request)

We can manufacture damper valve as per client's drawing & dimension.

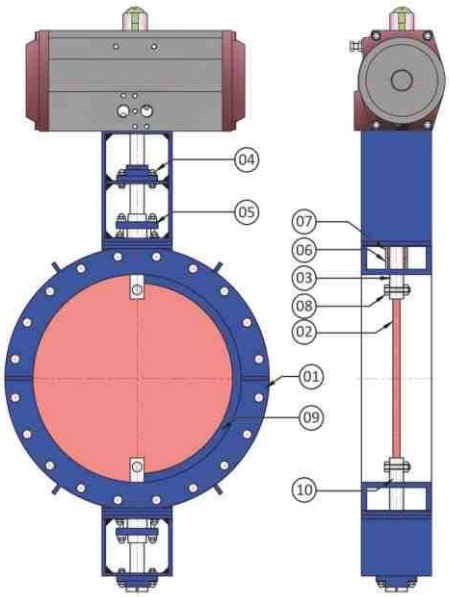

No.	DESCRIPTION	MATERIAL
1	Body	IS 2062 Gr. B
2	Disc	IS 2062 Gr. B
3	Shaft	AISI 410
4	Bearing	Standard
5	Gland Pata	IS 2062 Gr. B
6	Teflon Bush	Teflon
7	Grephite Ring	Graphite
8	Hex Bolt	S.S. 304
9	Seat Ring	IS 2062 Gr. B
10	Bottom Shaft	AISI 410

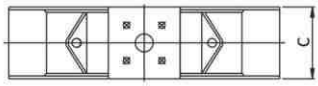

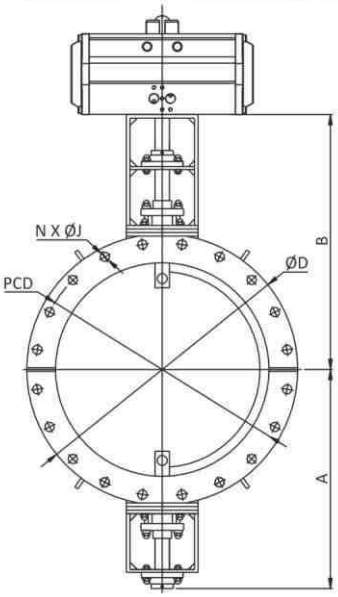

Dimensions : (All Dimensions are in mm)

Valve Model	Valve Size MM	Valve Size Inch	ØD ±5 mm	PDC ±0.5 mm	N	ØJ	A	B	C ±2 mm
ATF-MS-G-200	200	8"	320	280	8	18	310	360	150
ATF-MS-G-250	250	10"	375	335	12	18	338	388	150
ATF-MS-G-300	300	12"	440	395	12	22	370	420	150
ATF-MS-G-350	350	14"	490	445	16	22	395	445	150
ATF-MS-G-400	400	16"	540	495	16	22	420	470	150
ATF-MS-G-450	450	18"	595	550	16	22	448	498	150
ATF-MS-G-500	500	20"	645	600	20	22	523	573	200
ATF-MS-G-600	600	24"	755	705	20	26	578	628	200
ATF-MS-G-650	650	26"	785	744	20	26	593	643	200
ATF-MS-G-700	700	28"	860	810	24	26	630	680	200
ATF-MS-G-750	750	30"	887	846	24	26	644	394	200
ATF-MS-G-800	800	32"	975	920	24	30	688	738	200
ATF-MS-G-850	850	34"	1005	957	24	30	703	753	200
ATF-MS-G-900	900	36"	1075	1020	24	30	738	838	250
ATF-MS-G-1000	1000	40"	1175	1120	28	30	788	868	250
ATF-MS-G-1200	1200	48"	1405	1340	32	33	903	1003	250
ATF-MS-G-1400	1400	56"	1630	1560	36	36	1015	1115	300
ATF-MS-G-1600	1600	64"	1830	1760	40	36	1115	1215	300
ATF-MS-G-1800	1800	72"	2045	1970	44	39	1223	1323	300
ATF-MS-G-2000	2000	80"	2265	2180	48	42	1333	1433	300

Note : Big Sizes also available

Pub. on: January, 2015 (Rev.-01)

PNEUMATIC ROTARY ACTUATOR OPERATED

FEP / PFA Lined Butterfly Valve

Catalogue No.
APL / 2012

aira
VALVE AUTOMATION
ISO 9001 CO.

"aira"

offers ISO 5211 Standard Pneumatic Rotary Actuator Operated FEP / PFA Lined Butterfly Valve, engineered for optimum Solution to the corrosive Application.

Size Range : 2" to 12"

Butterfly Valve Specification	
Valve Type	Centric Disc Butterfly Valve with FEP / PFA Lined Body
Body Type	Short Wafer (Sandwiched between flanges) Two Piece Design
Seat Type	Lined with the body
End Connection	Wafer sandwiched (Lug Type On Request)
Pressure Rating	PN 10 / (PN 16 On Request)
Oper. Temp. Range	-25 °C to 200 °C Depending On MOC
Seat Leakage	Tight Shut Off

Accessories :

- On / OFF Indicator
- NAMUR Standard Solenoid Valve in all Standard Coil Voltage (Flame Proof Solenoid Coil - On Request)
- Pneumatic & Electro-Pneumatic valve positioner
- Declutchable Manual Over - Ride
- Limit Switches for On / Off Indication at Panel Board
- Filter + Regulator Combination with Pressure Gauge
- Air Lock Valve

Standard :-

Design And Manufacturer	: API 609 Category A/BS 5155 / MSS SP - 67 / C - 504
Valve Face To Face Dimension	: Short Wafer as per ISO 5752 Tab 5 API 609 Category A
Top flange driling	: ISO 5211 II
Inspection & Testing	: API 598 / BS 6755 / FCI - 70-2
Flange Standard Conformity	: ANSI 150, DIN PN 6 / 16
Spark Test	: 15 kv DC

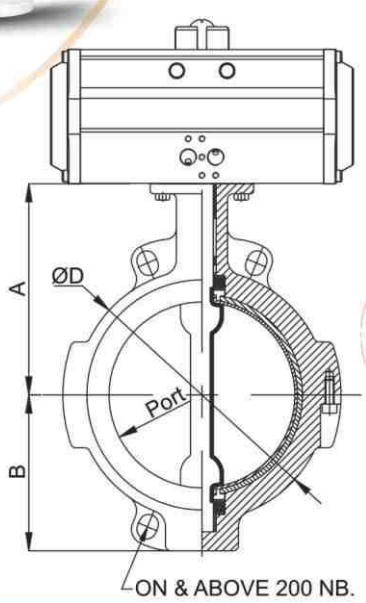

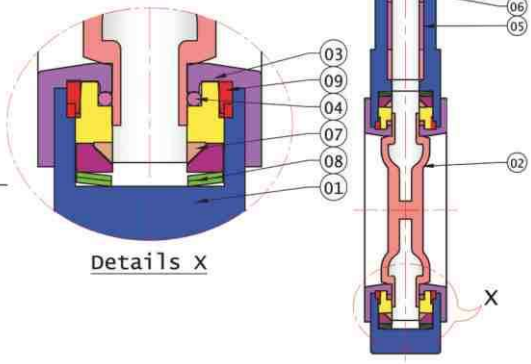

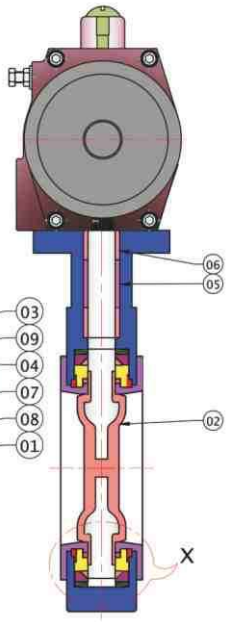

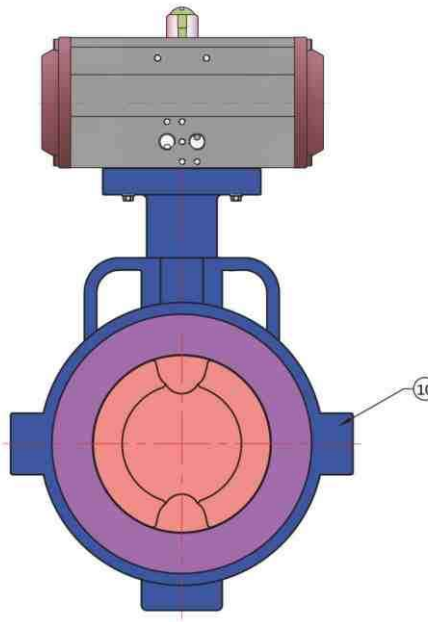

Dimensions : (All Dimensions are in mm)

Valve Model	Valve Size MM	Valve Size Inch	Port	A	B	F to F	ØD
FEP-SGI-50	50	2"	48	99.5	67	43	101
FEP-SGI-65	65	2.1/2"	62	115	65	47	112
FEP-SGI-80	80	3"	78	120	81	47	130
FEP-SGI-100	100	4"	98	158	95	54	160
FEP-SGI-125	125	5"	125	153.5	112.5	57	185
FEP-SGI-150	150	6"	148	195	122	59	218
FEP-SGI-200	200	8"	200	221	165	64	270
FEP-SGI-250	250	10"	241	236	208	72	340
FEP-SGI-300	300	12"	291	270	243.5	82	380

No.	DESCRIPTION	MATERIAL	QTY
1	Body	ASTM - A 126 Grade B (Gry Iron) ASTM - A 216 Grade WCB (Cast Steel) ASTM - A 351 Grade Cf8 / CF8M / CF3M	01
2	Disc	ASTM - A 351 Grade Cf8 / CF8M / CF3M (FEP / PFA) with Molding	01
3	Sleeve	FEP / PFA	01
4	'O' Ring	Viton	02
5	Bush	PTFE ((Teflon)	02
6	Bush	Metal Bush 304	02
7	Truth Bush	S. S. 304	02
8	Washer	Spring Steel	04
9	Gasket	Silicon Big	02
10	L. N. Bolt	S. S. 202	02

Note : Since, constant worldwide advancement in technology, We keep our rights reserved to make changes time to time in Technical specifications and Dimensions without prior notice.

Pub. on: January, 2015 (Rev.-01)

PNEUMATIC ROTARY ACTUATOR OPERATED

"PTFE SLEEVE" with MIRROR Finish Disc Butterfly Valve

Catalogue No.
APL / 2031

aira
VALVE AUTOMATION
ISO 9001 CO.

"aira"

offers ISO 5211 Standard Pneumatic Rotary Actuator Operated PTFE Lined Butterfly Valve for corrosive Application. The PTFE Seal Lined covers the entire wetted surface of the body and Extends on to the flanged contact taces, Thas elimination as possibility of media contact with the body.

Size Range : 2.1/2" to 48"

Butterfly Valve Specification	
Valve Type	Centric Disc Butterfly Valve with FEP / PFA Lined Body
Body Type	Short Wafer (Sandwiched between flanges) Two Piece Design
Seat Type	Teflon Sleeve
End Connection	Wafer sandwiched (Lug Type On Request)
Pressure Rating	PN 10 / (PN 16 On Request)
Oper. Temp. Range	160 °C Depending On MOC
Seat Leakage	Tight Shut Off

Accessories :

- On / OFF Indicator
- NAMUR Standard Solenoid Valve in
- all Standard Coil Voltage (Flame Proof Solenoid Coil - On Request)
- Pneumatic & Electro-Pneumatic valve positioner
- Declutchable Manual Over - Ride
- Limit Switches for On / Off Indication at Panel Board
- Filter + Regulator Combination with Pressure Gauge
- Air Lock Valve

Standard :-

Design And Manufacturer	: API 609 Category A/BS 5155 / MSS SP - 67 / C - 504
Valve Face To Face Dimension	: Short Wafer as per ISO 5752 Tab 5 API 609 Category A
Top flange driling	: ISO 5211 II
Inspection & Testing	: API 598 / BS 6755 / FCI - 70-2
Flange Standard Conformity	: ANSI 150, DIN PN 6 / 16

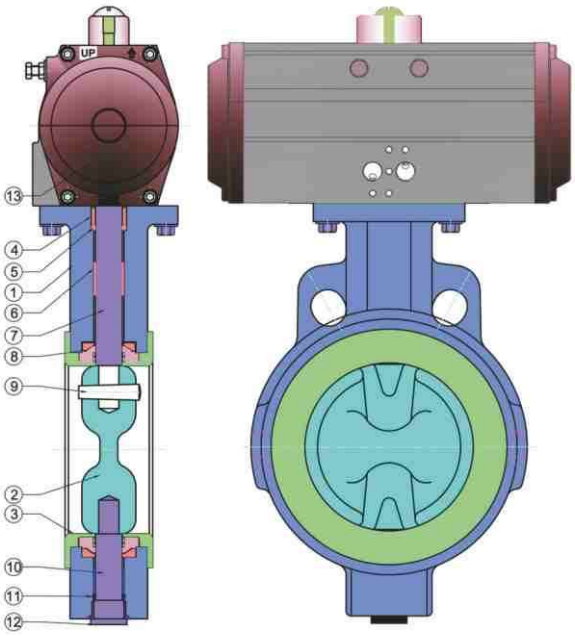

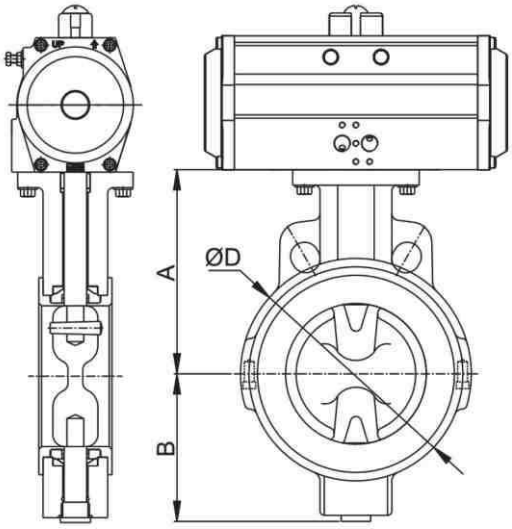

No.	Description	Material
1	Body	C.I. / WCB / CF8 / CF8M / D.I.
2	Disc	CF8 / CF8M / D.I.
3	Seat	PTFE
4	Collar	PTFE
5	"O" - Ring	Viton
6	Metal Bush	PTFE Coated
7	Top Shaft	AISI 410
8	Pad	Silicon
9	Disc Pin	S. S. 304
10	Bottom Shaft	AISI 410
11	"O" - Ring	Viton
12	Plug	M.S.
13	Actuator	Alluminium

Dimensions : (All Dimensions are in mm)

Valve Model	Valve Size		A	B	ØD
	MM	Inch			
ITC - 50	50	2"	99.5	67	101
ITC - 65	65	2.1/2"	115	65	112
ITC - 80	80	3"	120	81	130
ITC - 100	100	4"	158	95	160
ITC - 125	125	5"	153.5	112.5	185
ITC - 150	150	6"	195	122	218
ITC - 200	200	8"	221	165	270
ITC - 250	250	10"	236	208	340
ITC - 300	300	12"	270	243.5	380

Note : Big Sizes also available

Pub. on: January, 2015 (Rev.-01)

PNEUMATIC ROTARY ACTUATOR OPERATED

"UPVC" Butterfly Valve

Catalogue No.
APL / 2032

aira
VALVE AUTOMATION
ISO 9001 CO.

"aira"

offers ISO 5211 Standard Pneumatic Rotary Actuator Operated UPVC Butterfly Valve now come with an update design that offers angle switching control. Incresed neck height makes it easier to install. Sealing surface and through hole are processed on CNC machines for reliable and enhanced sealing performance.

Size Range : 2" to 8"

Butterfly Valve Specification	
Body	UPVC
Disc	Polypropylene
Pressure	7 Kg/cm²
Temperature	Upto 80 °C
Ends	Wafer Type

Advantages

- Improved PP disc to enhance the performance.
- Thickness body and seal to extend the service life.
- Materials meet drinking water standard.
- 100% pure virgin material, CaCO3 free (Chalk)
- UV resistant powder addeds.
- Can be assembled with pneumatic Actuator.

Accessories :

- On / OFF Indicator
- NAMUR Standard Solenoid Valve in
- all Standard Coil Voltage (Flame Proof Solenoid Coil - On Request)
- Pneumatic & Electro-Pneumatic valve positioner
- Declutchable Manual Over - Ride
- Limit Switches for On / Off Indication at Panel Board
- Filter + Regulator Combination with Pressure Gauge

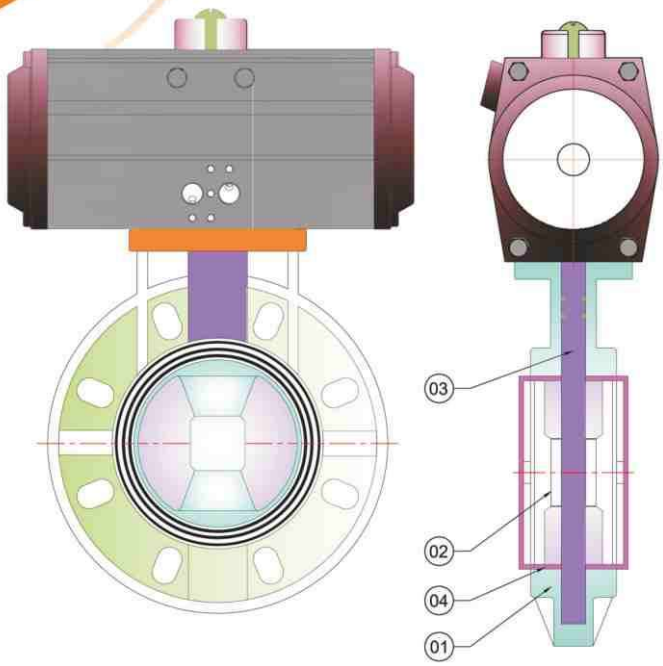

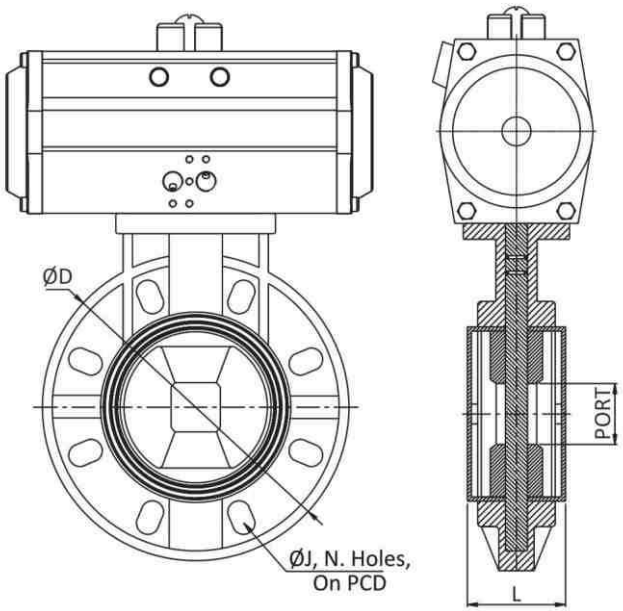

No.	DESCRIPTION	MATERIAL
1	Body	UPVC
2	Disc	Polypropylene
3	Shaft	AISI 410
4	Seat	NBR

Dimensions : (All Dimensions are in mm)

Valve Model	Valve Size		Port	L	ØD	ØJ	N	PCD
	MM	Inch						
UPB - 50	50	2"	54	44.5	160	20	4	123
UPB - 65	65	2.1/2"	67	48	184	21	4	143
UPB - 80	80	3"	83	53	198	21	8	157
UPB - 100	100	4"	101	57	231	21	8	186
UPB - 125	125	5"	127	68	257	24	8	213
UPB - 150	150	6"	152	73	285	24	8	240
UPB - 200	200	8"	200	92	340	24	8	296

Note : Since, constant worldwide advancement in technology, We keep our rights reserved to make changes time to time in Technical specifications and Dimensions without prior notice.

Pub. on: January, 2015 (Rev.-01)

PNEUMATIC ROTARY ACTUATOR OPERATED

Double Eccentric Off-Set Disc Wafer Type Butterfly Valve

Catalogue No.
APL / 1061

aira®
VALVE AUTOMATION
ISO 9001 CO.

609 - 0055

"aira"

offers ISO 5211 Standard Pneumatic Rotary Actuator Operated Off - Set Disc Butterfly Valve "WAFER" Type Construction engineered for multiply ON/OFF Operation in the large Pipe line and full flow down Stream.

Fire Safe Design

Size Range : 2.1/2" to 48"

Standard :

- Design And Manufacturing : API 609 Category "B" / MSS SP - 68
- Valve Face to Face Dimensions : API 609 Category "B" / ISO 5752 MSS SP-68
- Flange Standard Conformity : ASME B 16.5 Class 150 ASME B 16.47Series "A" Class 150
- Inspection & Testing : API 598
- Pressure Temperature Rating : ASME B16.34
- Top Flange Dimensions : Bolt Hole ISO 5211
- Stem Dimensions : Square Drive to ISO 5211
- Leakage Class : Class VI as per ANSI B 16, 16.104

Accessories :

- On / OFF Indicator
- NAMUR Standard Solenoid Valve in
- all Standard Coil Voltage (Flame Proof Solenoid Coil - On Request)
- Pneumatic & Electro-Pneumatic valve positioner
- Declutchable Manual Over - Ride
- Limit Switches for On / Off Indication at Panel Board
- Filter + Regulator Combination with Pressure Gauge
- Air Lock Valve

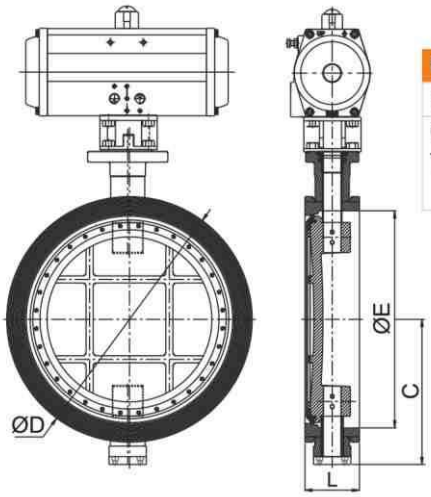

PRESSURE / TEMPERATURE RATING	
PRESSURE RATING	150# (PN 10 / PN 16 / PN 25)
OPERATING TEMPERATURE	NBR - -10 °C TO +90 °C / EPDM - -20 °C TO +120 °C
	VITON - 0 °C TO +220 °C / PTFE - -25 °C TO +180 °C
	RPTFE - -25 °C TO +220 °C / TFM -25 °C TO +250 °C

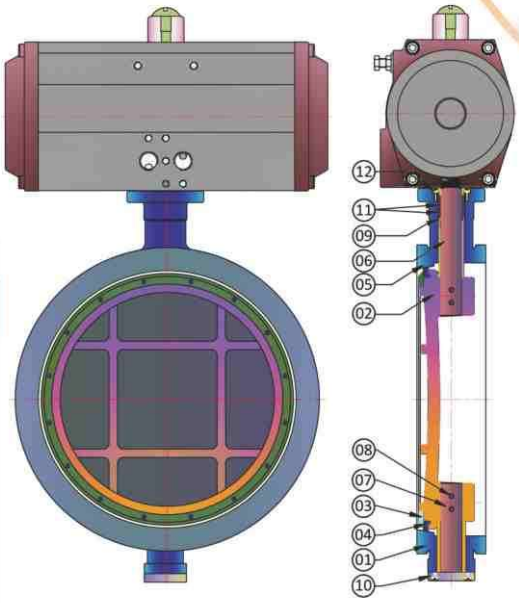

Dimensions : (All Dimensions are in mm)

Valve Model	Valve Size		L	ØD	ØE	C
	MM	Inch				
BOD-65	65	2.1/2"	48	104.8	70	----
BOD-80	80	3"	51	126	86	----
BOD-100	100	4"	54	158	110	96
BOD-125	125	5"	56	185.87	120	112
BOD-150	150	6"	57	216	152	115
BOD-200	200	8"	64	270	200	141
BOD-250	250	10"	71	325	250	179
BOD-300	300	12"	81	373	306	210
BOD-350	350	14"	92	412	355	234
BOD-400	400	16"	102	472	400	275
BOD-450	450	18"	114	532	450	327.5
BOD-500	500	20"	127	584	505	359
BOD-600	600	24"	154	692.2	612	409
BOD-650	650	26"	165	749.3	640	640
BOD-700	700	28"	165	800.1	705	500
BOD-750	750	30"	190	857.25	725	571
BOD-800	800	32"	190	915	800	630
BOD-850	850	34"	205	965.2	850	655.5
BOD-900	900	36"	205	1022.35	900	680
BOD-1000	1000	40"	300	1124	1000	735
BOD-1200	1200	48"	350	1359	1200	915

No.	Description	Material	Qty.
1	Body	C.I. / WCB / CF8 / CF8M / D.I.	1
2	Disc	C.I. / WCB / CF8 / CF8M / D.I.	1
3	Retainaer	M.S. / CF8 / CF8M	1
4	Disc Seal Ring	PTFE / RPTFE / NBR / EPDM / Viton	1
5	Body Seat Ring	S.S. 304 / 316	1
6	Shaft	S.S. 304 / 316 / 410	1
7	Stem Shaft	S.S. 304 / 316 / 410	1
8	Disc Pin	S.S. 304 / 316 / 410	4
9	Flange Side Washer	S.S. 304 / 316 / 410	1
10	Stem Square	M.S. / CF8 / CF8M	1
11	Gland Seal Set	PTFE / NBR / EDPM / Viton	5
12	Gland Plate	M.S. / CF8 / CF8M	1

Note : Since, constant worldwide advancement in technology, We keep our rights reserved to make changes time to time in Technical specifications and Dimensions without prior notice.

Pub. on: January, 2015 (Rev.-01)

PNEUMATIC ROTARY ACTUATOR OPERATED

Double Eccentric Off-Set Double Flange Butterfly Valve 150#

Catalogue No.
APL /1059

aira
VALVE AUTOMATION
ISO 9001 CO.

"aira"

offers ISO 5211 Standard Pneumatic Rotary Actuator Operated Off - Set Disc Butterfly Valve in Double Flange Construction engineered for multiple ON / OFF Operation in the large Pipe line and full flow down Stream.

Size Range : 2.1/2" to 48"

609 - 0055

Standard :

- Design And Manufacturing : API 609 / BS 5155 / BSEN 593 IS 13095 / AWWA C-504
- Valve Face to Face Dimensions : API 609 (Short Pattern) / BS 5155 (Short Pattern) IS 13095 (Short Pattern) AWWA C - 504 (Short Pattern)
- Flange Standard Conformity : ASME B16.5 Class 150 (Upto 24") ASME B16.47 Series "A" Class 150 (26" to 48") AWWA C-207, IS1538, BS5404, IS 6392
- Inspection & Testing : API 598 / BS 6755 / AWWA C -504
- Pressure Temperature Rating : ASME B16.34
- Top Flange Dimensions : Bolt Hole ISO 5211
- Stem Dimensions : Square Drive To ISO 5211
- Leakage Class : Class VI As Per ASME B 16, 16.104

Fire Safe Design

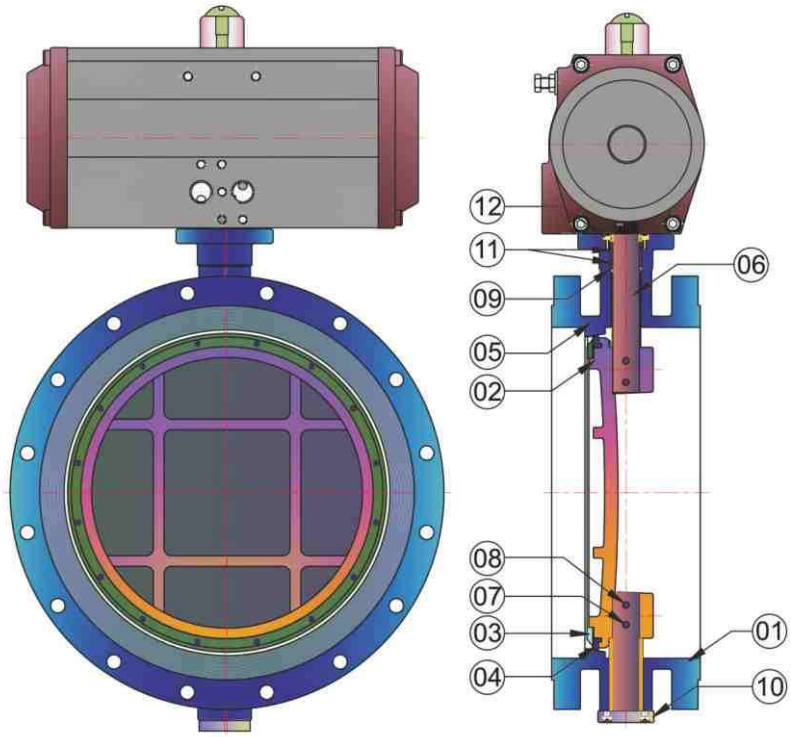

PRESSURE / TEMPERATURE RATING	
PRESSURE RATING	150# (PN 10 / PN 16 / PN 25)
OPERATING TEMPERATURE	NBR - -10 °C TO +90 °C
	EPDM - -20 °C TO +120 °C
	VITON - 0 °C TO +220 °C
	PTFE - -25 °C TO +180 °C
	RPTFE - -25 °C TO +220 °C
	TFM -25 °C TO +250 °C

Accessories :

- On / OFF Indicator
- NAMUR Standard Solenoid Valve in
- all Standard Coil Voltage (Flame Proof Solenoid Coil - On Request)
- Pneumatic & Electro-Pneumatic valve positioner
- Declutchable Manual Over - Ride
- Limit Switches for On / Off Indication at Panel Board
- Filter + Regulator Combination with Pressure Gauge
- Air Lock Valve

Notes : We Have Successfully Carried Out Proof of Design Test on these Rubber Seated Butterfly Valve as per AWWA C - 504

No.	Description	Material	Qty.
1	Body	C.I. / WCB / CF8 / CF8M / D.I	01
2	Disc	WCB / CF8 / CF8M / D.I	01
3	Retainaer	M.S. / CF8 / CF8M	01
4	Disc Seal Ring	RPTFE / PTFE / NBR / EPDM / Viton	01
5	Body Seat Ring	S.S. 304 / 316	01
6	Shaft	S.S. 304 / 316 / 410	01
7	Stem Shaft	S.S. 304 / 316 / 410	01
8	Disc Pin	S.S. 304 / 316 / 410	03
9	Flange Side Washer	S.S. 304 / 316 / 410	01
10	Stem Square	M.S. / CF8 / CF8M	01
11	Gland Seal Set	PTFE / NBR / EDPM / Viton / RPTFE	05
12	Gland Plate	M.S. / CF8 / CF8M	01

Pub. on: January, 2015 (Rev.-01)

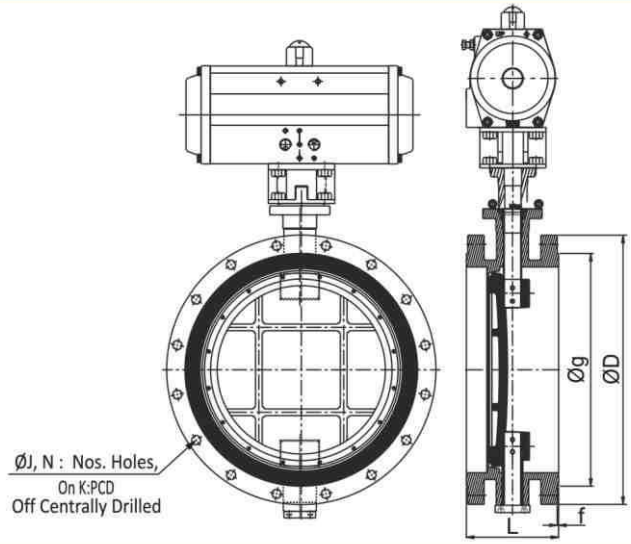

Note : Big Sizes also available

Dimensions : (All Dimensions are in mm)

Valve Model	Valve Size		150#							AWWA C - 504					
	MM	Inch	L API 609	ØD	Øg	f	ØJ	N	K:PCD	L AWWA C - 504	ØD	b	ØJ	N	K:PCD
BOD - 65	65	2.1/2"	112	180	104.8	2	19.05	04	139.7	127	180	16	19.05	4	139.7
BOD - 80	80	3"	114	190	127	2	19.05	04	152.4	127	190	16	19.05	4	152.4
BOD - 100	100	4"	127	230	157.2	2	19.05	08	190.5	127	228.6	16	19.05	8	190.5
BOD - 125	125	5"	140	255	185.7	2	22.2	08	215.9	127	254	16	19.05	8	215.9
BOD - 150	150	6"	140	280	215.9	2	22.2	08	241.3	127	279.4	17.5	22.35	8	241.3
BOD - 200	200	8"	152	345	269.9	2	22.2	08	298.5	152	342.9	17.5	22.35	8	298.45
BOD - 250	250	10"	165	405	323.8	2	25.4	12	362	203	406.4	17.5	25.4	12	361.95
BOD - 300	300	12"	178	485	381	2	25.4	12	431.8	203	482.6	20.6	25.4	12	431.8
BOD - 350	350	14"	190	535	412.8	2	28.6	12	476.3	203	533.4	23.8	28.45	12	476.25
BOD - 400	400	16"	216	595	469.9	2	28.6	16	539.8	203	596.9	25.4	28.45	16	539.75
BOD - 450	450	18"	222	635	533.4	2	31.75	16	577.9	203	635	26.9	31.75	16	577.85
BOD - 500	500	20"	229	700	584.2	2	31.75	20	635	203	698.5	28.5	31.75	20	635
BOD - 600	600	24"	267	815	692.2	2	34.9	20	749.3	203	812.8	31.75	35.05	20	749.3
BOD - 650	650	26"	292	870	749	2	34.9	24	806.4	305	869.9	33.3	35.05	24	806.45
BOD - 700	700	28"	292	925	800	2	34.9	28	863.6	305	927.1	33.3	35.05	28	863.6
BOD - 750	750	30"	318	985	857	2	34.9	28	914.4	305	984.25	35	35.05	28	914.4
BOD - 800	800	32"	318	1060	914	2	41.3	28	977.9	305	1060.45	38.1	41.15	28	977.9
BOD - 850	850	34"	320	1110	965	2	41.3	32	1028.7	305	1111.25	38.1	41.15	32	1028.7
BOD - 900	900	36"	340	1170	1022	2	41.3	32	1085.8	305	1168.4	41.2	41.15	32	1085.85
BOD - 1000	1000	40"	410	1290	1124	2	41.3	36	1200.2	305	1289	41.2	41.15	36	1200.15
BOD - 1050	1050	42"	410	1345	1194	2	41.3	36	1257.3	305	1346.2	44.5	41.15	36	1257.3
BOD - 1200	1200	48"	470	1510	1359	2	41.3	44	1422.4	381	1511.3	47.62	41.15	44	1422.4

Dimensions : (All Dimensions are in mm)

Valve Model	Valve Size		PN 10							PN 16						
	MM	Inch	L API 609	ØD	Øg	f	ØJ	N	K:PCD	L API 609	ØD	Øg	f	ØJ	N	K:PCD
BOD - 65	65	2.1/2"	----	----	----	----	----	----	----	112	185	122	3	18	04	145
BOD - 80	80	3"	114	200	133	3	18	04	160	114	200	138	3	18	08	160
BOD - 100	100	4"	127	220	153	3	19	08	180	127	220	158	3	18	08	180
BOD - 150	150	6"	140	285	209	3	23	08	240	140	285	212	3	22	08	240
BOD - 200	200	8"	152	340	264	3	23	08	295	152	340	268	3	22	12	295
BOD - 250	250	10"	165	395	319	3	23	12	350	165	405	320	3	26	12	355
BOD - 300	300	12"	178	445	367	4	23	12	400	178	460	378	4	26	12	410
BOD - 350	350	14"	190	505	427	4	23	16	460	190	520	438	4	26	16	470
BOD - 400	400	16"	216	565	477	4	28	16	513	216	580	490	4	30	16	525
BOD - 450	450	18"	222	615	527	4	28	20	565	222	640	490	4	30	20	585
BOD - 500	500	20"	229	670	582	4	28	20	620	229	715	610	4	33	20	650
BOD - 600	600	24"	267	780	682	5	31	20	725	267	840	725	5	36	20	770
BOD - 650	650	26"	N.A.	N.A.	N.A.	N.A.	N.A.	N.A.	N.A.	N.A.	N.A.	N.A.	N.A.	N.A.	N.A.	N.A.
BOD - 700	700	28"	292	895	797	5	31	24	840	292	910	795	5	36	24	840
BOD - 750	750	30"	318	960	857	5	31	24	900	N.A.	N.A.	N.A.	N.A.	N.A.	N.A.	N.A.
BOD - 800	800	32"	318	1015	904	5	34	24	950	318	1025	900	5	39	24	950
BOD - 900	900	36"	330	1115	1004	5	34	28	1050	330	1125	1000	5	39	28	1050
BOD - 1000	1000	40"	410	1230	1111	5	36	28	1160	410	1255	1115	5	42	28	1170
BOD - 1200	1200	48"	470	1455	1328	5	40	32	1380	470	1485	1330	5	48	32	1390

Note : Since, constant worldwide advancement in technology, We keep our rights reserved to make changes time to time in Technical specifications and Dimensions without prior notice.

Pub. on: January, 2015 (Rev.-01)

PNEUMATIC ROTARY ACTUATOR OPERATED

Double Eccentric Off-Set Double Flange Butterfly Valve 300# & 600#

Catalogue No.
APL / 2033

aira
VALVE AUTOMATION
ISO 9001 CO.

"aira"

offers ISO 5211 Standard Pneumatic Rotary Actuator Operated Off - Set Disc Butterfly Valve in Double Flange Construction engineered for multiply ON / OFF Operation in the large Pipe line and full flow down Stream.

Size Range : 2" to 24" (300#) / 2" to 24" (600#)

Standard :-

Design And Manufacturer	: API 609 / BS 5155 / BSEN 593 / IS 13095
Valve Face To Face Dimension	: API 609 (Short Pattern) / BS 5155 (Long Pattern) IS 13095 (Long Pattern)
Flange Standard Conformity	: ASME / ANSI B 16.5 Class 300 & 600
Inspection & Testing	: API 598

609 - 0055

PRESSURE / TEMPERATURE RATING (300# & 600#)	
PRESSURE RATING	300# (PN 25 / PN 40)
	600# (PN 60)
OPERATING TEMPERATURE	NBR - -10 °C TO +90 °C / EPDM - -20 °C TO +120 °C
	VITON - 0 °C TO +220 °C / PTFE - -25 °C TO +180 °C
	RPTFE - -25 °C TO +220 °C / TFM -25 °C TO +250 °C

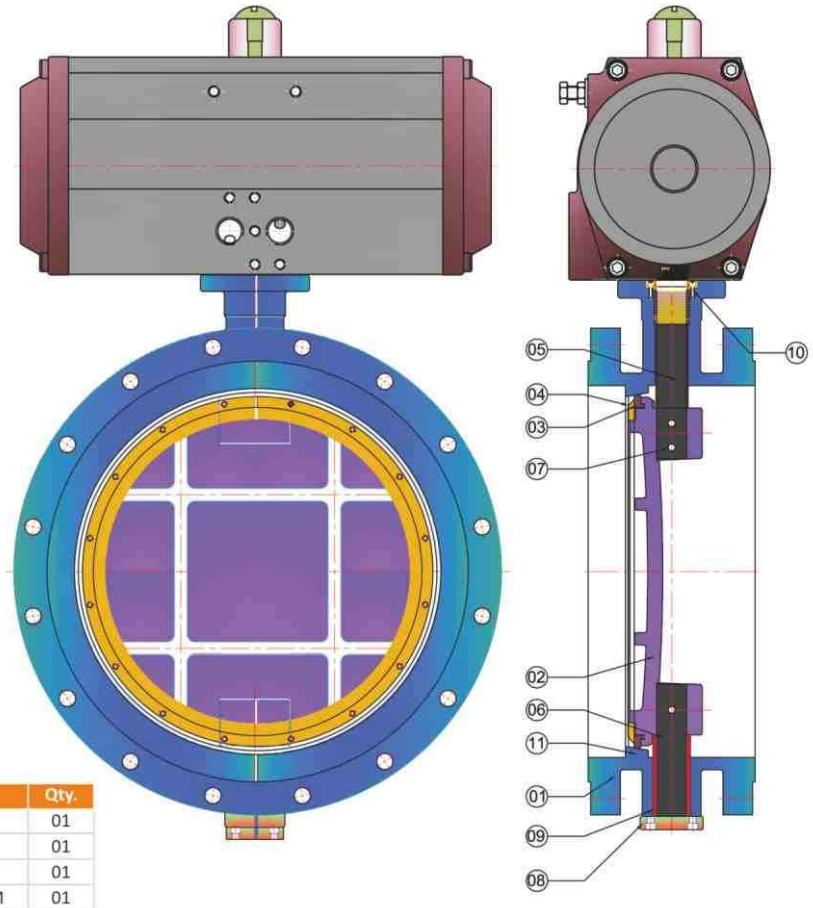

Accessories :

- On / OFF Indicator
- NAMUR Standard Solenoid Valve in
- all Standard Coil Voltage (Flame Proof Solenoid Coil - On Request)
- Pneumatic & Electro-Pneumatic valve positioner
- Declutchable Manual Over - Ride
- Limit Switches for On / Off Indication at Panel Board
- Filter + Regulator Combination with Pressure Gauge
- Air Lock Valve

No.	Description	Material	Qty.
1	Body	ASTM A 216 Gr. WCB / A 351 Gr. CF8 / CF8M	01
2	Disc	ASTM A 216 Gr. WCB / A 351 Gr. CF8 / CF8M	01
3	Disc Seal Ring	PTFE / RPTFE / NBR / EPDM / Viton	01
4	Retainer	IS 2062 Gr B M.S. / ASTM A 351 Gr. CF8 / CF8M	01
5	Shaft	ASTM A 479 Type 410 / 304 / 316	01
6	Steam Shaft	ASTM A 479 Type 410 / 304 / 316	01
7	Disc Pin	S.S. 202 / 304 / 316	02
8	Steam Plate	M.S.	01
9	Shaft Bush	ASTM A - 479 Type 410 / 304 / 316	02
10	Gland Plate	M.S.	01
11	Body Seat Ring	ASTM A 479 Type 304 / 316	01

Note : Since, constant worldwide advancement in technology, We keep our rights reserved to make changes time to time in Technical specifications and Dimensions without prior notice.

Pub. on: January, 2015 (Rev.-01)

Valve Torque 300#								VALVE TORQUE 600#				
Valve Size		10 Bar	20 Bar	25 Bar	35 Bar	40 Bar	50 Bar	30 Bar	40 Bar	60 Bar	80 Bar	100 Bar
MM	Inch	N - m	N - m	N - m	N - m	N - m	N - m	N - m	N - m	N - m	N - m	N - m
80	3"	55	62	70	75	76	80	----	----	----	----	----
100	4"	72	89	104	111	114	125	----	----	----	----	----
125	5"	96	127	137	148	160	178	----	----	----	----	----
150	6"	126	138	178	194	205	220	600	700	850	1000	1300
200	8"	205	252	281	304	328	354	1000	1150	1400	1650	2100
250	10"	325	468	503	560	594	663	1650	1900	2300	2800	3800
300	12"	465	685	777	868	937	1005	2400	2850	3450	4100	4900
350	14"	747	1126	1461	1776	1836	2021	3400	4300	5350	6300	7500
400	16"	1065	1654	2020	2204	2448	2700	5000	6900	8900	9700	11500
450	18"	1346	2143	2458	2938	3183	3428	7000	9400	12000	14500	17000
500	20"	2014	3056	3590	3852	4244	4570	8700	12000	15000	18000	21000
600	24"	3052	4578	5223	5876	6464	6921	15000	21000	25700	30500	36000

Butterfly Valve CV Values 300#											Butterfly Valve CV Values 600#								
Valve Size		10°	20°	30°	40°	50°	60°	70°	80°	90°	10°	20°	30°	40°	50°	60°	70°	80°	90°
MM	Inch																		
80	3"	----	----	----	----	----	----	----	----	----	4	15.6	31.5	47.6	74.5	110	180	200	230
100	4"	----	----	----	----	----	----	----	----	----	8	27.9	56	90	130	190	310	350	400
125	5"	----	----	----	----	----	----	----	----	----	13.1	46	92	150	220	310	520	580	670
150	6"	17.4	61	120	190	290	420	680	770	870	19.9	70	140	220	330	480	780	890	1000
200	8"	27.2	100	200	300	460	640	1070	1200	1370	36.3	130	260	400	610	860	1430	1600	1830
250	10"	42	150	290	460	690	980	1630	1840	2090	56	200	390	620	920	1300	2170	2450	2780
300	12"	59	200	410	650	970	1390	2300	2600	2950	84	290	590	930	1400	1980	3290	3700	4200
350	14"	73	260	510	800	1200	1710	2840	3200	3640	100	370	730	1140	1700	2500	4060	4570	5200
400	16"	100	350	700	1100	1660	2360	39140	4410	5010	140	480	960	1500	2300	3220	5340	6020	6840
450	18"	120	440	870	1360	2040	2900	4810	5430	6170	1180	640	1260	2000	3000	4220	7000	7900	9000
500	20"	170	580	1160	1810	2720	3870	640	7250	8250	240	840	1680	2600	3950	5630	9300	10500	12000
600	24"	260	900	1800	2830	4250	6050	10000	11300	12900	380	1300	2630	4200	6200	8800	14600	16500	18700

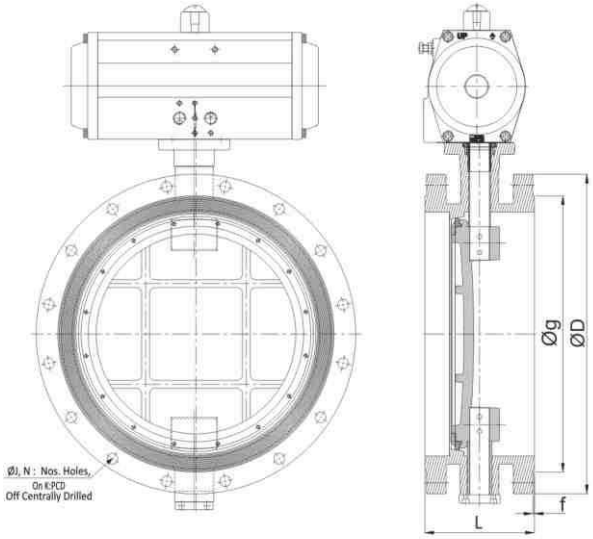

Dimensions : (All Dimensions are in mm)

Valve Model	Valve Size		300#								600#						
	MM	Inch	L	ØD	Øg	f	ØJ	b	N	K:PCD	L	ØD	Øg	f	ØJ	N	K:PCD
BOD - 50	50	2"	150	165.1	91.9	1.6	19.05	-----	08	127	----	----	----	----	----	----	----
BOD - 65	65	2.1/2"	170	190.5	104.6	1.6	22.35	-----	08	149.35	----	----	----	----	----	----	----
BOD - 80	80	3"	180	209.55	127	1.6	22.35	28.45	08	168.14	180	210	127	6.35	22.0	08	168.3
BOD - 100	100	4"	190	254	157.2	1.6	22.35	31.75	08	200.0	190	275	157	6.35	25.4	08	215.9
BOD - 125	125	5"	200	279.4	185.6	1.6	22.35	35.05	08	234.9	210	330	185	6.35	28.5	08	266.7
BOD - 150	150	6"	210	317.5	215.9	1.6	22.35	36.50	12	269.9	210	355	216	6.35	28.5	12	292.1
BOD - 200	200	8"	230	381	270	1.6	25.4	41.15	12	330.2	230	420	270	6.35	32.0	12	349.2
BOD - 250	250	10"	250	444.5	323.8	1.6	28.5	47.75	16	387.35	250	510	324	6.35	35.0	16	431.8
BOD - 300	300	12"	270	520.7	381	1.6	31.75	50.80	16	450.9	270	560	381	6.35	35.0	20	489.5
BOD - 350	350	14"	290	584.2	412.75	1.6	31.75	53.85	20	514.35	290	605	413	6.35?	38.1	20	527.0
BOD - 400	400	16"	310	647.7	469.9	1.6	35.0	57.15	20	571.5	310	685	470	6.35	41.15	20	603.2
BOD - 450	450	18"	330	711.2	533.4	1.6	35.0	60.45	24	628.6	330	745	534	6.35	44.45	20	654.0
BOD - 500	500	20"	350	774.7	584.2	1.6	35.0	63.50	24	685.8	350	815	584	6.35	44.45	24	723.9
BOD - 600	600	24"	390	914.4	692.15	1.6	41.14	69.85	24	812.8	390	940	692	6.35	50	24	838.2

Note : Since, constant worldwide advancement in technology, We keep our rights reserved to make changes time to time in Technical specifications and Dimensions without prior notice.

Pub. on: January, 2015 (Rev.-01)

PNEUMATIC ROTARY ACTUATOR OPERATED

Spherical Disc Valve 150# & 300#

Catalogue No.
APL / 1025

aira
VALVE AUTOMATION
ISO 9001 CO.

"aira"

Precised & Strong Durable to 240 °C / 600 °C Temperature And 10 Kg/cm² / 20 Kg/cm² Pressure

5 Special Effects

- Compact Design - Full Port - Offers Mass Flow
- Simple Structure, Light & Smooth - Takes Very Shot Time For Opening & Closing With Very Low Torque
- Easy Maintenance - Replaceable Seals Design
- Self Sealing - Self Cleaning The Under Cut Disc Segment And Seal Tends To Wipe Away The Material Form The Sealing Area,
- Gland Pressing Plate - Ensure Compete Utilization of Gland Seals

Application

Hygienic Powder & Slurries, especially in Pharmaceutical Industries.
Chemical and Dyeing Fluids in Textile Processing
Brine Waters & Oils.
Steam Lines, Air / Gas Lines / Vacuum.

Spherical Disc Valve has been Proved as Superior to Other Valves in Many Aspects, Particularly in...

- **Weight** ■ **Space** ■ **Pressure Range**
- **Multiple Operations** ■ **Maintenance Ease**
- **Torque & Economy**

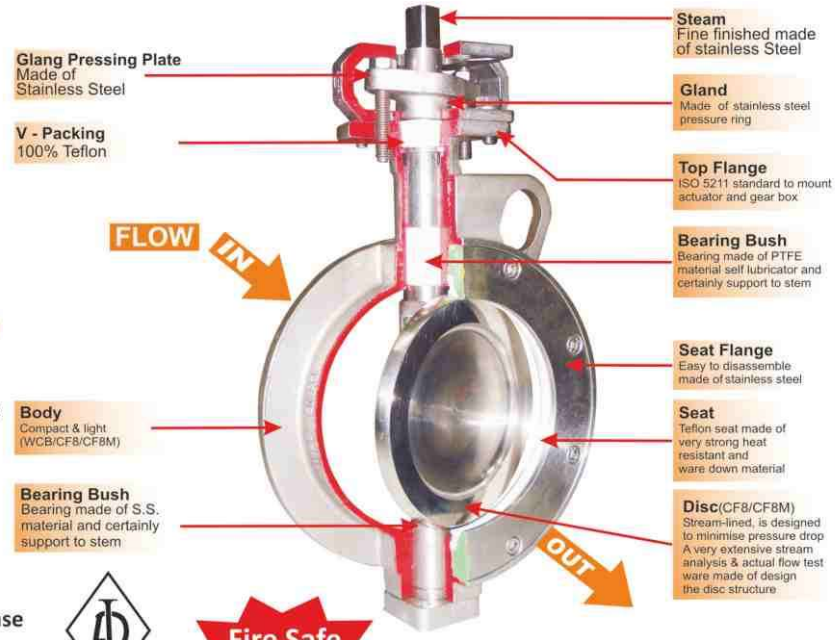

609 - 0055

Fire Safe Design

Accessories :

- On / OFF Indicator
- NAMUR Standard Solenoid Valve in
- all Standard Coil Voltage (Flame Proof Solenoid Coil - On Request)
- Pneumatic & Electro-Pneumatic valve positioner
- Declutchable Manual Over - Ride
- Limit Switches for On / Off Indication at Panel Board
- Filter + Regulator Combination with Pressure Gauge
- Air Lock Valve

Spherical Disc Valve	Technical Specifications :
Size Range	1.1/2" to 36"
Construction Type	Double Eccentric Disc Design
Body	WCB / CF8 / CF8M
Disc	CF8 / CF8M
Seat	PTFE (available EPDM / Metal to Metal)
Shaft	AISI 410 / 304 / 316
Plate Mounting	Namur Standard
Pressure Rating	ANSI 150 Class ANSI 300 / 600 Class
End Connection	Wafer Sandwiched Lug Type
Operating Temp. Range	-25 °C to 180 °C (Soft Seating) -25 °C to 600 °C (Metal to Metal Seating)
Operating	Pneumatic Actuator Operated

CV Value in GPM

Valve Size MM	Valve Size Inch	CV Full Open 90° (GPM) Class 150
(40)	1.1/2"	70
(50)	2"	92
(65)	2.1/2"	150
(80)	3"	260
(100)	4"	460
(125)	5"	760
(150)	6"	1350
(200)	8"	2200
(250)	10"	3200
(300)	12"	4700
(350)	14"	5800
(400)	16"	8000
(450)	18"	10500
(500)	20"	14000
(600)	24"	21000
(650)	26"	23400
(700)	28"	27000
(750)	30"	33300
(800)	32"	40200
(900)	36"	56500

CV Value in GPM

Valve Size MM	Valve Size Inch	Differential Pressure (AP) 5 Kg/cm²	10 Kg/cm²	15 Kg/cm²	20 Kg/cm²
(40)	1.1/2"	0.8	1.0	1.2	1.5
(50)	2"	0.9	1.2	1.5	1.7
(65)	2.1/2"	1.6	2.2	2.4	3.0
(80)	3"	3.0	3.4	4.2	5.0
(100)	4"	4.0	4.6	5.4	6.4
(125)	5"	5.8	8.0	9.5	11.5
(150)	6"	9.0	11.5	12.5	14.5
(200)	8"	14.0	17.5	24.0	28.0
(250)	10"	23.5	26.5	28.0	30.0
(300)	12"	32.0	36.0	40.0	50.0
(350)	14"	50.0	65.0	83.5	108.5
(400)	16"	69.4	94.5	120.0	160.0
(450)	18"	95.5	128.0	157.2	205.0
(500)	20"	122.5	193.3	210.0	293.4
(600)	24"	213.3	293.4	366.7	440.1
(650)	26"	265	350	400	510
(700)	28"	300	395	480	595
(750)	30"	321	420	519	617
(800)	32"	481	630	780	920
(900)	36"	518	663	850	992

Standards	Series 5150 (40 NB To 600 NB)	Series 6150 (650 NB To 1200 NB)
Design and manufacturing	API 609 Category B	MSS SP - 68
Valve face to face dimensions	API 609 Category B / ANSI B 16.10	ISO 5752 Series 20, MSS SP - 68
Flange Standard conformity	ANSI B 16.5 Class 150	ASME / ANSI B 16.47 Series 'A'
Inspection & testing Standard	API 598 / ANSI FCI 70 - 2	API 598 / BS 6755
Fire safe testing	API 607	API 607
Pressure temperature rating	ASME / ANSI B 16.34	ASME / ANSI B 16.34

Standard (300#) :-

Design And Manufacturer	: API 609 Category "B"
Valve Face To Face Dimension	: API 609 Category "B"
Flange Standard Conformity	: ASME / ANSI B 16.5 Class 300
Inspection & Testing	: API 598

Pub. on: January, 2015 (Rev.-01)

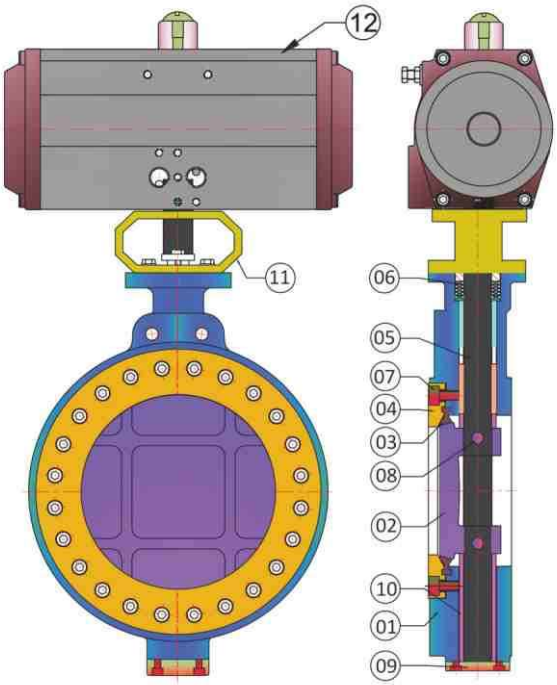

No.	Description	Material
1	Body	WCB / CF8 / CF8M
2	Disc	CF8 / CF8M
3	Replaceable Seat	PTFE / NBR / Viton
4	Retainer	M.S. / S. S. 304 / 316
5	Shaft	S. S. 410 / 304 / 316
6	Gland Packing	PTFE / NBR / Viton
7	Retainer Bolt	S. S.
8	Disc Pin	S. S. 304 / 316
9	Steam Plate	M.S. / S. S. 304 / 316
10	Shaft Bush	M.S. / S. S. 304 / 316
11	Bracket	M.S.
12	Actuator	STD.

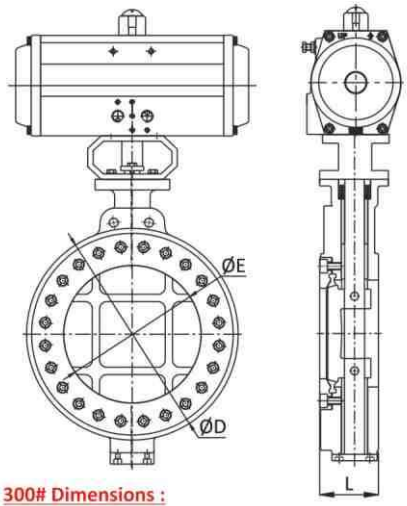

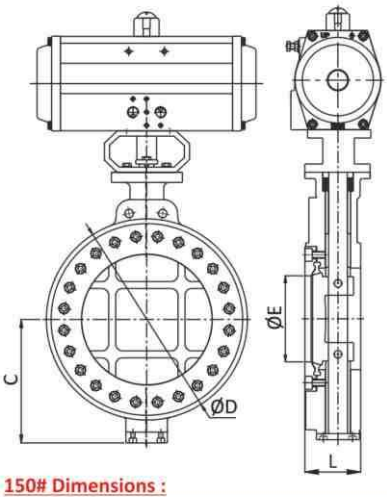

300# Dimensions :

Dimensions 300# : (All Dimensions are in mm)

Valve Size		L	ØD	ØE
MM	Inch			
40	1.1/2"	42	88	38
50	2"	45	101	50.8
65	2.1/2"	48	108.5	60.6
80	3"	48	127	72
100	4"	54	159	100
125	5"	59	187	123
150	6"	59	219	143.2
200	8"	64	270	192
250	10"	87	340	239.2
300	12"	92	394	290
350	14"	117	436	335
400	16"	113	500	387.5
450	18"	149	540	425
500	20"	159	595	475
600	24"	181	705	560

150# Dimensions :

Dimensions 150# : (All Dimensions are in mm)

Valve Model	Valve Size		L	C	ØE	ØD	Weight (Approx.)
	MM	Inch					
SDV - 40	40	1.1/2"	42	57	38	82	1.600
SDV - 50	50	2"	45	68.5	50.8	95	2.200
SDV - 65	65	2.1/2"	48	74.5	60.6	108	3.000
SDV - 80	80	3"	48	80	72	127	3.800
SDV - 100	100	4"	54	96	100	159	5.600
SDV - 125	125	5"	57	117	123	186	7.700
SDV - 150	150	6"	57	132	143	217	10.400
SDV - 200	200	8"	64	157	192	270	15.000
SDV - 250	250	10"	71	187	239	322	25.750
SDV - 300	300	12"	81	218	290	382	36.000
SDV - 350	350	14"	92	242	335	436	46.900
SDV - 400	400	16"	102	270.5	387.5	495	66.850
SDV - 450	450	18"	114	362	425	540	117.000
SDV - 500	500	20"	127	400	475	595	146.500
SDV - 600	600	24"	154	454	560	705	290.000
SDV - 650	650	26"	165	478	608	755	360.000
SDV - 700	700	28"	165	505	661.5	810	390.000
SDV - 750	750	30"	190	542	696	855	475.000
SDV - 800	800	32"	190	580	755	913	524.000
SDV - 900	900	36"	203	640	864	1032	675.000

Note : Since, constant worldwide advancement in technology, We keep our rights reserved to make changes time to time in Technical specifications and Dimensions without prior notice.

Pub. on: January, 2015 (Rev.-01)

PNEUMATIC ROTARY ACTUATOR OPERATED

"METAL SEATED" Spherical Disc Valve

Catalogue No.
APL / 1081

aira
VALVE AUTOMATION
ISO 9001 CO.

609 - 0055

"aira"

SMT Model metal to metal replaceable seat design Spherical Disc Valve.
Temperature upto 400 °C flat metal seat leakage Class VI.

Fire Safe Design

Size Range : 2" to 18"

Accessories :

- On / OFF Indicator
- NAMUR Standard Solenoid Valve in
- all Standard Coil Voltage (Flame Proof Solenoid Coil - On Request)
- Pneumatic & Electro-Pneumatic valve positioner
- Declutchable Manual Over - Ride
- Limit Switches for On / Off Indication at Panel Board
- Filter + Regulator Combination with Pressure Gauge
- Air Lock Valve

Standard :-

Design And Manufacturer	: API 609
Valve Face To Face Dimension	: API 609 Category "B"
Flange Standard Conformity	: ASME / ANSI B 16.5 Class 150
Inspection & Testing	: API 598
Leakage Class	: ASME B 16, 16.104 Leakage Class VI

PRESSURE / TEMPERATURE RATING	
PRESSURE RATING	PN 10
OPERATING TEMPERATURE	-50 °C TO +400 °C

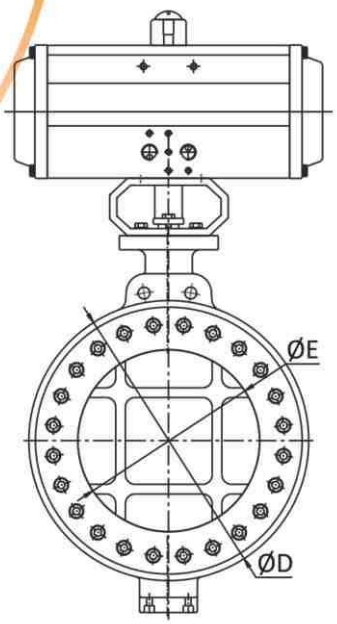

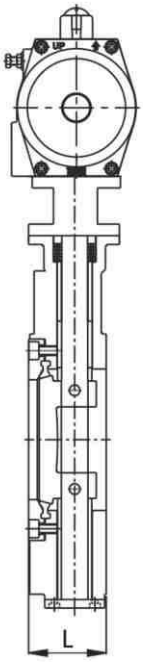

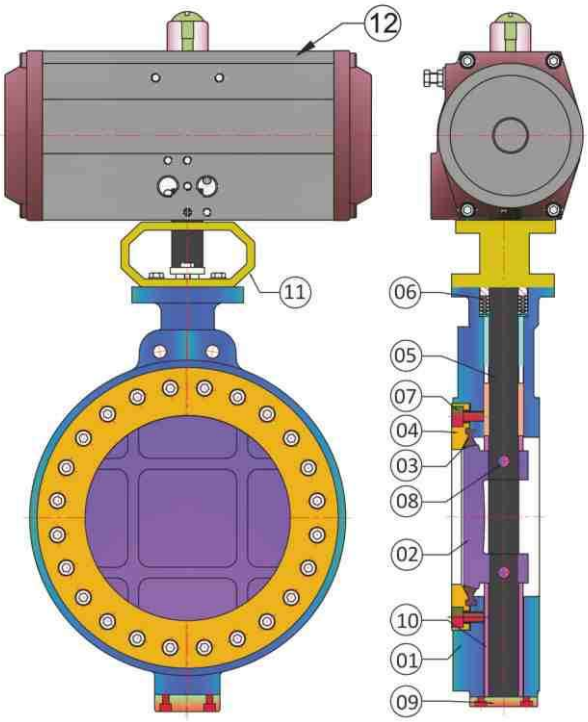

Dimensions : (All Dimensions are in mm)

Valve Model	Valve Size MM	Valve Size Inch	L	C	ØE	ØD
SMT - 50	50	2"	47	65	50.8	95
SMT - 65	65	2.1/2"	52	66.5	60.6	108
SMT - 80	80	3"	52	77	72	127
SMT - 100	100	4"	57	93	100	159
SMT - 125	125	5"	60	117	123	186
SMT - 150	150	6"	60	131	143	217
SMT - 200	200	8"	67	167	192	270
SMT - 250	250	10"	72	196	239	322
SMT - 300	300	12"	85	218	290	382
SMT - 350	350	14"	92	242	335	436
SMT - 400	400	16"	102	270.5	387.5	495
SMT - 450	450	18"	114	362	425	540

No.	Description	Material	Qty.
1	Body	WCB / CF8 / CF8M	1
2	Disc	CF8 / CF8M	1
3	Retainaer	M.S. / CF8 / CF8M	1
4	Seat Ring	CF8 / CF8M	1
5	Shaft	S.S. 304 / 316	1
6	Stem Shaft	S.S. 304 / 316 / 410	1
7	Disc Pin	S.S. 304 / 316 / 410	1
8	Shaft Collar	S.S. 304 / 316 / 410	4
9	Shaft Bush	S.S. 304 / 316	1
10	Shaft Bush	Graphite	1
11	Gland Seal Set	Graphite	5
13	Actuator	STD.	1

Note : Since, constant worldwide advancement in technology, We keep our rights reserved to make changes time to time in Technical specifications and Dimensions without prior notice.

Pub. on: January, 2015 (Rev.-01)

PNEUMATIC ROTARY ACTUATOR OPERATED

"TRIPLE" Off-Set Butterfly Valve

Catalogue No.
APL / 2034

aira®
VALVE AUTOMATION
ISO 9001 CO.

"aira"

offers ISO 5211 Standard Pneumatic Rotary Actuator Operated Triple Off - Set Disc Butterfly Valve in Wafer Construction engineered for multiply ON / OFF Operation in the large Pipe line and full flow down Stream.

609 - 0055

Size Range : 2" to 12"

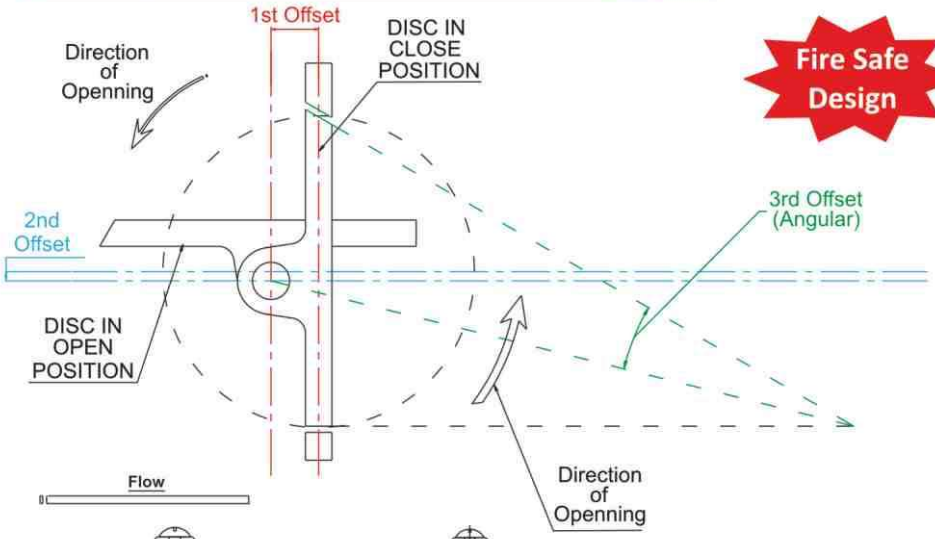

Fire Safe Design

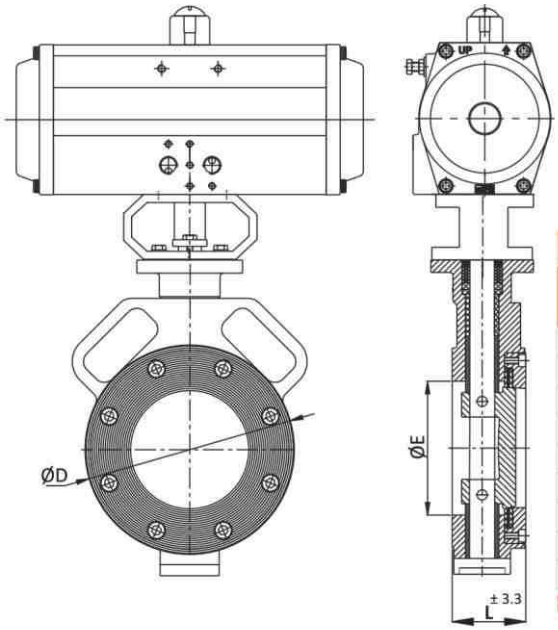

Standard :-

Design And Manufacturer	: API 609
Valve Face To Face Dimension	: API 609 Category "B"
Flange Standard Conformity	: ASME / ANSI B 16.5 Class 150 / 300
Inspection & Testing	: API 598
Leakage Class	: ASME B 16, 16.104 Leakage Class VI

Dimensions : (All Dimensions are in mm)

Valve Model	Valve Size MM	Valve Size Inch	L	ØD	ØE
SDVTOB - 50	50	2"	47	95	50.8
SDVTOB - 65	65	2.1/2"	52	108	60.6
SDVTOB - 80	80	3"	48	127	72
SDVTOB - 100	100	4"	54	159	100
SDVTOB - 125	125	5"	57	186	123
SDVTOB - 150	150	6"	57	217	143
SDVTOB - 200	200	8"	64	270	192
SDVTOB - 250	250	10"	71	322	239
SDVTOB - 300	300	12"	81	382	290

Note : Big Sizes also available

Accessories :

- On / OFF Indicator
- NAMUR Standard Solenoid Valve in
- all Standard Coil Voltage (Flame Proof Solenoid Coil - On Request)
- Pneumatic & Electro-Pneumatic valve positioner
- Declutchable Manual Over - Ride
- Limit Switches for On / Off Indication at Panel Board
- Filter + Regulator Combination with Pressure Gauge
- Air Lock Valve

CV Values

Valve Size MM	Valve Size Inch	10°	20°	30°	40°	50°	60°	70°	80°	90°
50	2"	2	5	11	19	28	41	58	77	85
65	2.1/2"	2	9	20	28	45	60	80	120	130
80	3"	3	10	22	42	64	96	150	157	160
100	4"	6	17	41	75	116	174	273	284	290
125	5"	6	45	75	170	280	478	650	707	795
150	6"	7	51	119	221	340	510	799	833	850
200	8"	4	103	239	445	684	1026	1607	1676	1710
250	10"	50	151	353	655	1008	1515	2369	2470	2520
300	12"	79	236	552	1024	1576	2364	3704	3861	3940

VALVE TORQUE 150#

Valve Size MM	Valve Size Inch	5 Bar N - m	10 Bar N - m	20 Bar N - m
50	2"	11	15	21
65	2.1/2"	20	28	38
80	3"	38	43	63
100	4"	50	58	80
125	5"	73	100	144
150	6"	113	144	181
200	8"	175	219	350
250	10"	294	331	375
300	12"	400	450	625

Pub. on: January, 2015 (Rev.-01)

PNEUMATIC ROTARY ACTUATOR OPERATED

Pharma Butterfly Valve

Catalogue No.
APL / 1071

aira
VALVE AUTOMATION
ISO 9001 CO.

"aira"

Offers Specially Pharma Butterfly Valve design for power application with be used in pharma machinery.

Size Range : 2.1/2" to 16"

Accessories :

- On / OFF Indicator
- NAMUR Standard Solenoid Valve in
- all Standard Coil Voltage (Flame Proof Solenoid Coil - On Request)
- Pneumatic & Electro-Pneumatic valve positioner
- Declutchable Manual Over - Ride
- Limit Switches for On / Off Indication at Panel Board
- Filter + Regulator Combination with Pressure Gauge
- Air Lock Valve

PRESSURE / TEMPERATURE RATING	
WORKING PRESSURE	MAX. 3 TO 4 KG/CM^2
OPERATING TEMPERATURE	150 °C

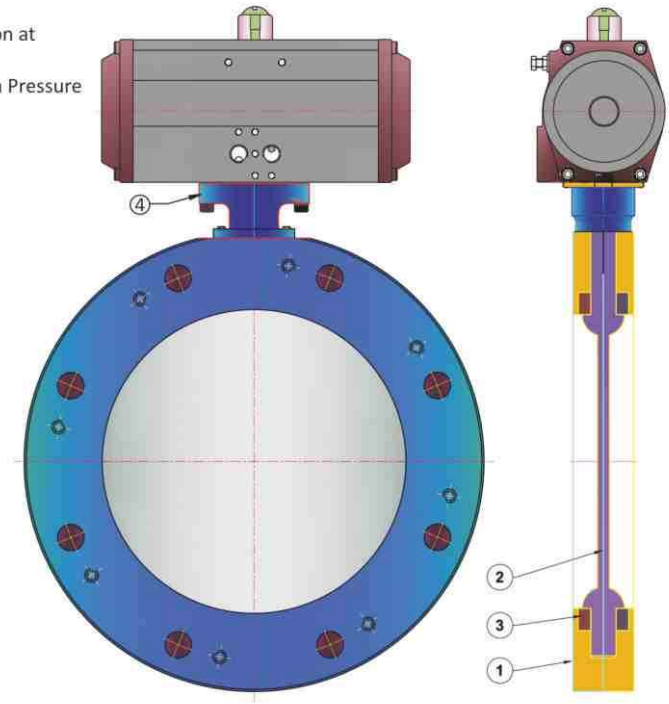

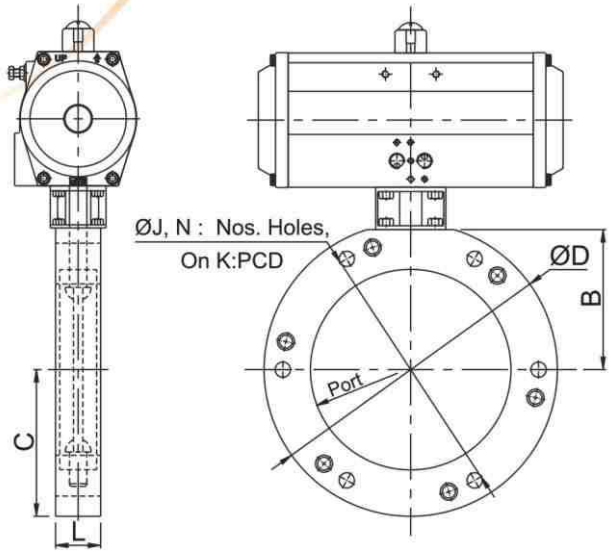

No.	Description	Material	Qty.
1	Body	WCB / CF8 / CF8M	01
2	Disc	WCB / CF8 / CF8M	01
3	Seat	Silicon	01
4	Bracket	S.S.	01

Dimensions : (All Dimensions are in mm)

Valve Model	Valve Size		Port	L	ØD	N	ØJ	K:PCD	B	C
	MM	Inch								
PBV - 65	65	2.1/2"	65	26	178	4	19.05	139.7	----	----
PBV - 80	80	3"	80	26	190	4	19.05	152.4	----	----
PBV - 100	100	4"	98	32	163	4	11	140	----	----
PBV - 150	150	6"	150	30	227	6	11	202.8	111	113.5
PBV - 200	200	8"	200	32	279	6	11	255	137	139.5
PBV - 250	250	10"	250	32	354.5	6	11	327	173	177.25
PBV - 300	300	12"	300	35	405	8	13.5	378	199	202.5
PBV - 350	350	14"	350	40	527	12	25.4	469.9	260.5	261
PBV - 400	400	16"	400	40	577.9	12	25.4	520.7	285	290

Note : Since, constant worldwide advancement in technology, We keep our rights reserved to make changes time to time in Technical specifications and Dimensions without prior notice.

Pub. on: January, 2015 (Rev.-01)

PNEUMATIC ROTARY ACTUATOR OPERATED

Double Flange MS Fabricated Butterfly Valve

Catalogue No.
APL / 2016

aira®
VALVE AUTOMATION
ISO 9001 CO.

"aira"

Steel Fabricated Double Flange Butterfly Valve Construction engineered for multiply ON / OFF Operation in the large Pipe line and full flow down Stream.

Size Range : 50" to 104" (12" to 48" OnRequest)

609 - 0055

Standard :-

Design And Manufacturer	: AWWA C - 504
Valve Face To Face Dimension Upto 72"	: AWWA C - 504
Valve Face To Face Dimension Upto 72"	: As Per Manufacturer Standard
Flange Standard Conformity	: AWWA C - 207 Class "D"
Inspection & Testing	: AWWA C - 504
Leakage Class	: PN 6 / PN 10

PRESSURE / TEMPERATURE RATING	
PRESSURE RATING	PN 10
OPERATING TEMPERATURE	-50 °C TO +180 °C

PRESSURE / TEMPERATURE RATING		
TESTING	BODY	SEAT
HYDRAULIC	16 KG/CM^2	10 KG/CM^2
PNEUMATIC	7 KG/CM^2	

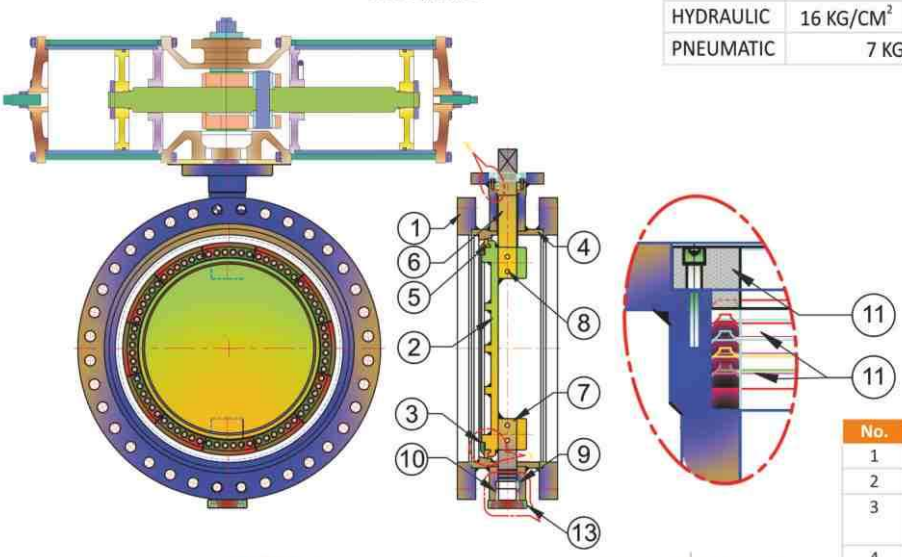

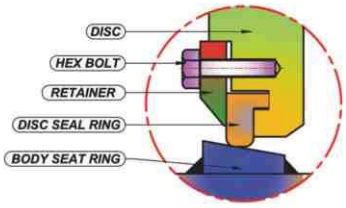

Detail - X

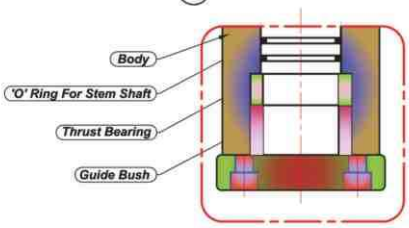

Detail-B

No.	Description	Material
1	Body	IS 2062 Gr. B M. S.
2	Disc	IS 2062 Gr. B M. S.
3	Retainer	IS 2062 Gr. B / ASTM A - 240 S.S. 304 / 316
4	Body Seat Ring	ASTM A - 479 Type 304 / 316
5	Disc Seal Ring	EPDM / NBR / Viton
6	Shaft	ASTM A - 479 Type 410 / 304 / 316
7	Stem Shaft	ASTM A - 479 Type 410 / 304 / 316
8	Disc Pin	ASTM A - 479 Type 410 / 304 / 316
9	Bearing	Double Thrust Bearing
10	Guide Bush	Bronze
11	Seal Set	EPDM / NBR / Viton
12	Gland Plate	M. S.
13	Stem Plate	IS 2062 Gr. B

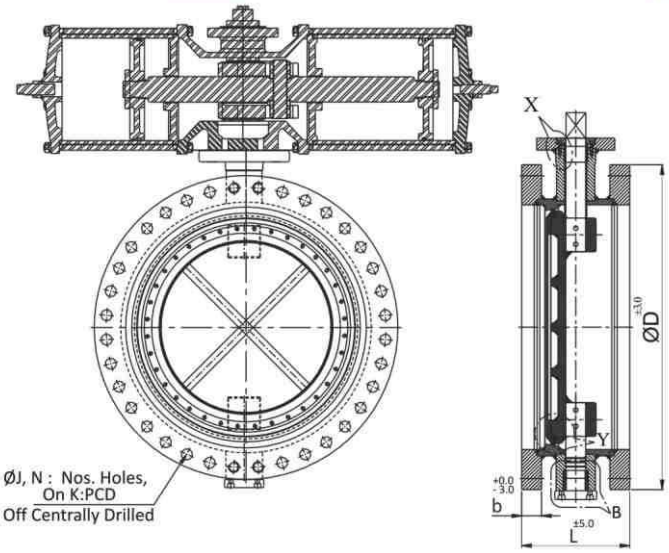

Dimensions : (All Dimensions are in mm)

Valve Size MM	Valve Size Inch	L	ØD	b	ØJ	N	PDC
1250	50"	381	1568.5	51	44.45	44	1479.6
1300	52"	381	1626	51	44.45	44	1536.7
1350	54"	381	1682.8	54	44.45	44	1593.8
1400	56"	381	1770	57.15	44.45	52	1670
1500	60"	381	1854.2	57.15	44.45	52	1758.95
1600	64"	381	1915	60	44.45	52	1820
1650	66"	457	2032	63.5	44.45	52	1930.4
1800	72"	457	2197.1	66.5	44.45	60	2095.5
1950	78"	760	2362.2	69.9	50.8	64	2260.6
2000	80"	760	2449	70	50.8	64	2342
2100	84"	830	2533.7	73	50.8	64	2425.7
2200	88"	830	2800	77	58	68	2673.5
2400	96"	910	2876.6	82.6	58	68	2755.9
2500	100"	990	3048	82.6	63.5	72	2908.3
2600	104"	990	3138	86	63.5	72	2994

Note : Since, constant worldwide advancement in technology, We keep our rights reserved to make changes time to time in Technical specifications and Dimensions without prior notice.

Pub. on: January, 2015 (Rev.-01)

PNEUMATIC ROTARY ACTUATOR OPERATED

Aluminium Pressure Die Cast Butterfly Valve

Catalogue No.
APL / 1071

aira
VALVE AUTOMATION
ISO 9001 CO.

"aira"

Offers ISO 5211 Standard Pneumatic Rotary Actuator Operated "Aluminium Body & SS 316 Disc" KITZ Butterfly Valve with EPDM Rubber.

Size Range : 1.1/2" to 8"

Butterfly Valve Specification	
Body	Aluminium Pressure Die Cast
Disc	CF8M (S. S. 316)
Stem	AISI 410 / AISI 304
Shaft	AISI 410 / AISI 304
Seat	EPDM
Valve Rating	PN 10
Body Pressure	225 PSIG
Seat Pressure	165 PSIG
Temperature	140 °C

Accessories :

- On / OFF Indicator
- NAMUR Standard Solenoid Valve in all Standard Coil Voltage (Flame Proof Solenoid Coil - On Request)
- Pneumatic & Electro-Pneumatic valve positioner
- Declutchable Manual Over - Ride
- Limit Switches for On / Off Indication at Panel Board
- Filter + Regulator Combination with Pressure Gauge
- Air Lock Valve

Item	Type Of Test	Testing Pressure	Working Pressure	Operating Temperature (High)
Actuator	Pneumatic Bubble Test	180 PSIG	45 To 150 PSIG	-20 °C to 80 °C (High Temp. On Request)
Valve Body	Hydraulic	225 PSIG	150 PSIG	Max. 200 °C
Seat	Hydraulic	150 PSIG	150 PSIG	Max. 200 °C
Seat	Pneumatic	105 PSIG	150 PSIG	Max. 200 °C

Standard :-

Design and Manufacturer	: API 609 category A/BS 5155 / MSS SP - 67 / C - 504
Valve Face to Face Dimensions	: Short Wafer as per ISO 5752 Tab 5 API 609 Category A
Top Flanged Drilling	: ISO 5211 II
Inspection and Testing	: API 598 / BS 6755 / FCI 70 - 2
Flanged Standard Conformity	: ANSI 150, DIN PN 6 / 16

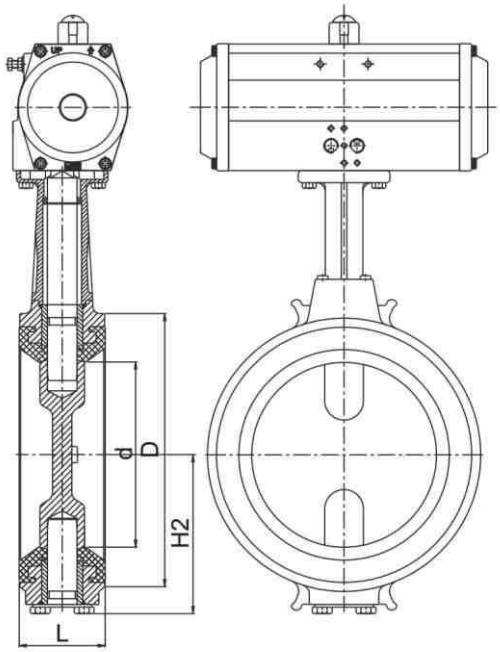

Dimensions : (All Dimensions are in mm)

Valve Model	Valve Size		d	H2	L	D
	MM	Inch				
KITZ - 40	40	1.1/2"	40	60	33	78
KITZ - 50	50	2"	50	66	43	93
KITZ - 65	65	2.1/2"	65	74	46	118
KITZ - 80	80	3"	80	83	46	129
KITZ - 100	100	4"	100	94	52	149
KITZ - 125	125	5"	125	122	56	184
KITZ - 150	150	6"	150	135	56	214
KITZ - 200	200	8"	196	161	60	259

Note : Since, constant worldwide advancement in technology, We keep our rights reserved to make changes time to time in Technical specifications and Dimensions without prior notice.

Pub. on: January, 2015 (Rev.-01)

PNEUMATIC DIAPHRAGM &
CYLINDER OPERATED

CONTROL VALVES

SERIES : D

aira®

VALVE AUTOMATION
ISO 9001 CO.

ISO 9001 : 2008 BUREAU VERITAS Certification

609 - 0055

CMIL:3812155

CIMFR

CE IBR

DCCD Nagpur

2/2 Way Pneumatic Single & Double Acting Operated

Angle Type On / Off Control Valve

Catalogue No.
APL / 1010

aira
VALVE AUTOMATION
ISO 9001 CO.

"aira"

offers 2/2 Way Single Acting & Double Acting type Pneumatic Actuator Operated Investment Casting Angle Type Control Valve.

Size Range : 1/2" to 4" (Screwed / Flanged)

SRT / SRK Model TYPES	
Normally Close	Energised To Open
Normally Open	Energised To Close

ASV / TOF Model TYPES
DOUBLE ACTING
SINGLE ACTING

Actuator Specification	
Port Connection	1/4" BSP (NPT On Request)
Operating Pressure	4.5 to 7 BAR (1/2" to 2"), 5 to 7 Bar (2.1/2" to 4")
Operating Cycles	350 to 650 Cycles / Hr.

Valve Specification	
Body Test Pressure	24 Bar Maximum
Working Pressure	Upto 10 BAR
Working Temperature	On Steam - Continuos 155 °C, Intermitted 180 °C with Teflon Seating Buna Nitrile 80 °C, EPDM 120 °C, Viton 220 °C
Leakage	As Per ANSI B 16, 16.104 Leakage Class VI Shut off tight / Bubble Tight

Features :

- "Y" Type Construction for ON/OFF application having self - Cleaning features.
- Best choice for speedy and multiple operation.
- Due to Angle shape, easy to mount at congested place.
- Due to Angle seated body, Insensitive to the contaminated fluids.
- Full flow with negligible pressure drop.

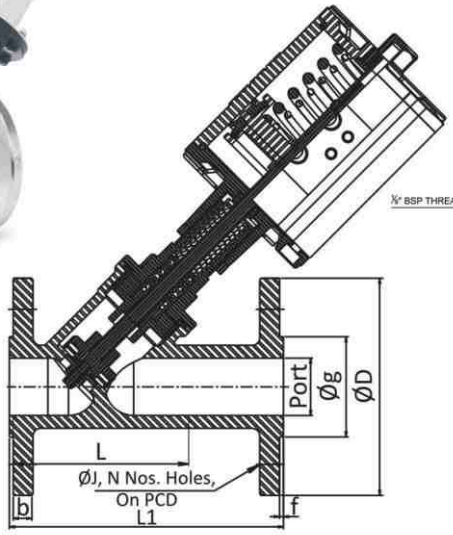

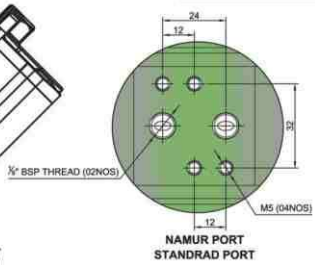

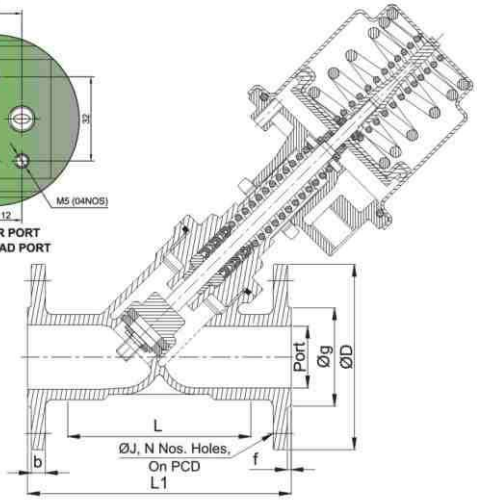

Accessories :

- 3/2 & 5/2 Way Namur Solenoid Valve
- Pilot Valve
- On / Off Type Limit Switch
- Combination (Filter + Regulator)
- Moisture Separator
- Quick Exhaust Valve

Dimensions : (All Dimensions are in mm)

Valve Model	Size		SRT / ASV	SRK / TOF	Port	ØD	b	Øg	f	ØJ	N	PCD	Weight Kgs.	
	Inch	MM	L	L1									S/E	F/E
SRT/SRK/ASV/TOF - 15	1/2"	15	65	131.40	12.5	88	8	34.9	1.6	15.9	04	60.3	1.760	3.000
SRT/SRK/ASV/TOF - 20	3/4"	20	75	151	19	98	7.5	42.9	1.6	15.9	04	69.9	2.220	3.560
SRT/SRK/ASV/TOF - 25	1"	25	90	160	25	106	7.5	50.8	1.6	15.9	04	79.4	3.000	4.900
SRT/SRK/ASV/TOF - 32	1.1/4"	32	102	184	30	----	----	63.8	1.6	15.9	04	----	7.320	10.240
SRT/SRK/ASV/TOF - 40	1.1/2"	40	125	189	38	125	7.5	73	1.6	15.9	04	98.4	10.440	14.560
SRT/SRK/ASV/TOF - 50	2"	50	151	230	49	150	8	92.10	1.6	19.05	04	120.7	----	----
SRT/SRK/ASV/TOF - 65	2.1/2"	65	195.5	239	64	180	15.9	104.8	1.6	19.05	04	139.7	----	----
SRT/SRK/ASV/TOF - 80	3"	80	195	250	75	190	19	127	1.6	19.05	04	152.4	----	----
SRT/SRK/ASV/TOF - 100	4"	100	314	420	102	230	22.3	157.2	1.6	19.05	08	190.50	----	----

POSITION IN NORMALLY CLOSE VALVE

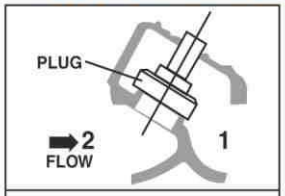

Flow To Open Plug

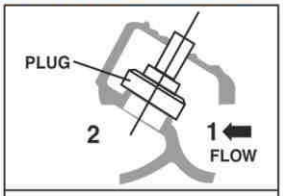

Flow To Close Plug

POSITION IN NORMALLY OPEN VALVE

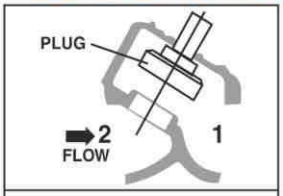

Flow To Open Plug

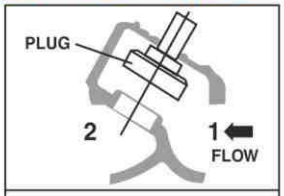

Flow To Close Plug

Note : Since, constant worldwide advancement in technology, We keep our rights reserved to make changes time to time in Technical specifications and Dimensions without prior notice.

Pub. on: January, 2015 (Rev.-01)

Model
SRT : Screwed / **SRK :** Flanged

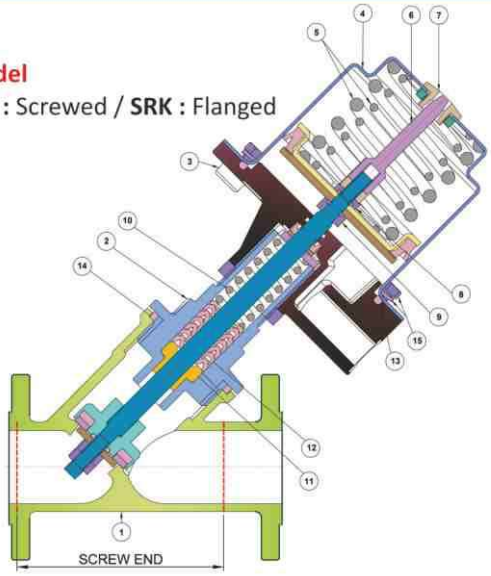

No.	DESCRIPTION	Material	Qty.
1	Body	CF8 / CF8M	01
2	Bonnet	CF8 / CF8M	01
3	Flange	Allu. Alloy	01
4	Cap	S. S. 304	01
5	Piston Spring (R.H.) & (L.H.)	Spring Steel	01
6	Piston Indicator	Nylon	01
7	Piston Indicator Guide & Nut	Nylon	01
8	Piston Collar (Small)	Brass	01
9	Piston Collar (Big)	Brass	01
10	Spring for Bonnet	S. S. 304	01
11	"T" Bush (Guide Bush) Bonnet	PTFE + C	01
12	Bonnet (U-Seal)	PTFE + C	02
13	O-Ring For Flange	NBR	01
14	Teflon for Body (Sealing Gasket)	PTFE	01
15	Piston Cap Hex Bolt & Spring Washer	S. S. 304	06

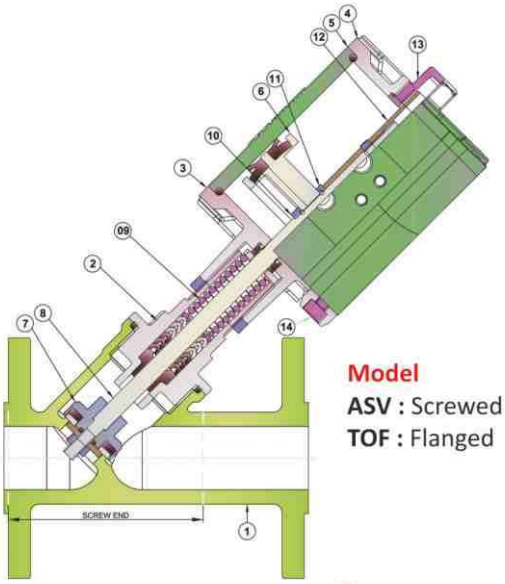

Model
ASV : Screwed
TOF : Flanged

Double Acting Description

No.	DESCRIPTION	Material	Qty.
1	Body	CF8 / CF8M	01
2	Bonnet	CF8 / CF8M	01
3	Flange Bottom Cover	CF8 / CF8M	01
4	Flange Top Cover	CF8 / CF8M	01
5	Act. Cap	Aluminium	01
6	Piston	Aluminium	01
7	Plug	S. S. 304	01
8	Plug + Piston Shaft	S. S. 304	01
9	Spring For Bonnet	M. S.	01
10	Piston Collar (Big)	Brass	01
11	Piston Collar (Small)	Brass	01
12	Indicator For Piston	Nylon / Alumi.	01
13	Dom Indicator	Nylon	01
14	Socket Head Cap Screw	Std.	08

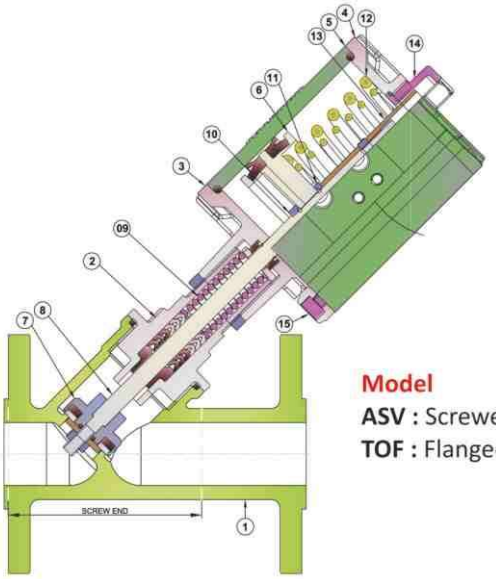

Model
ASV : Screwed
TOF : Flanged

Single Acting Description

No.	DESCRIPTION	Material	Qty.
01	Body	CF8 / CF8M	01
02	Bonnet	CF8 / CF8M	01
03	Flange Bottom Cover	CF8 / CF8M	01
04	Flange Top Cover	CF8 / CF8M	01
05	Act. Cap	Aluminium	01
06	Piston	Aluminium	01
07	Plug	S. S. 304	01
08	Plug + Piston Shaft	S. S. 304	01
09	Spring For Bonnet	M. S.	01
10	Piston Collar (Big)	Brass	01
11	Piston Collar (Small)	Brass	01
12	Spring For Piston	Spring Steel	01
13	Indicator For Piston	Nylon / Aluminium	01
14	Dom Indicator	Nylon	01
15	Socket Head Cap Screw	STD.	08

Pub. on: January, 2015 (Rev.-01)

2/2 Way Pneumatic Single & Double Acting

Globe Type On / Off Valve

Catalogue No.
APL / 1084

aira
VALVE AUTOMATION
ISO 9001 CO.

"aira"

offers 2/2 Way Single & Double Acting Pneumatic Operated Investment Casting Globe Type On / Off Valve.

Size Range : 1/2" to 4" Screwed / Flanged End

Actuator Specification	
Port Connection	1/4" BSP (NPT On Request)
Operating Pressure	3.5 To 7 Bar
Operating Cycles	350 to 650 Cycles / Hr.

GKS / GKF TYPES	
Normally Close	Energised To Open
Normally Open	Energised To Close

AGS / AGF TYPES
Double Acting
Single Acting

Valve Specification	
Body Test Pressure	24 Bar Maximum
Working Pressure	Refer to Table
Working Temperature	On Steam - Continuos 155 °C, Intermitted 180 °C with Teflon Seating Buna Nitrile 80 °C, EPDM 120 °C, Viton 220 °C
Leakage	As Per ANSI B 16.104 - 1976 Teflon Seating Class IV For Other Soft Seating Class VI Drop Tight / Bubble Tight

Accessories :

- 3/2 & 5/2 Way Namur Solenoid Valve
- Pilot Valve
- On / Off Type Limit Switch
- Combination (Filter + Regulator)
- Moisture Separator
- Quick Exhaust Valve

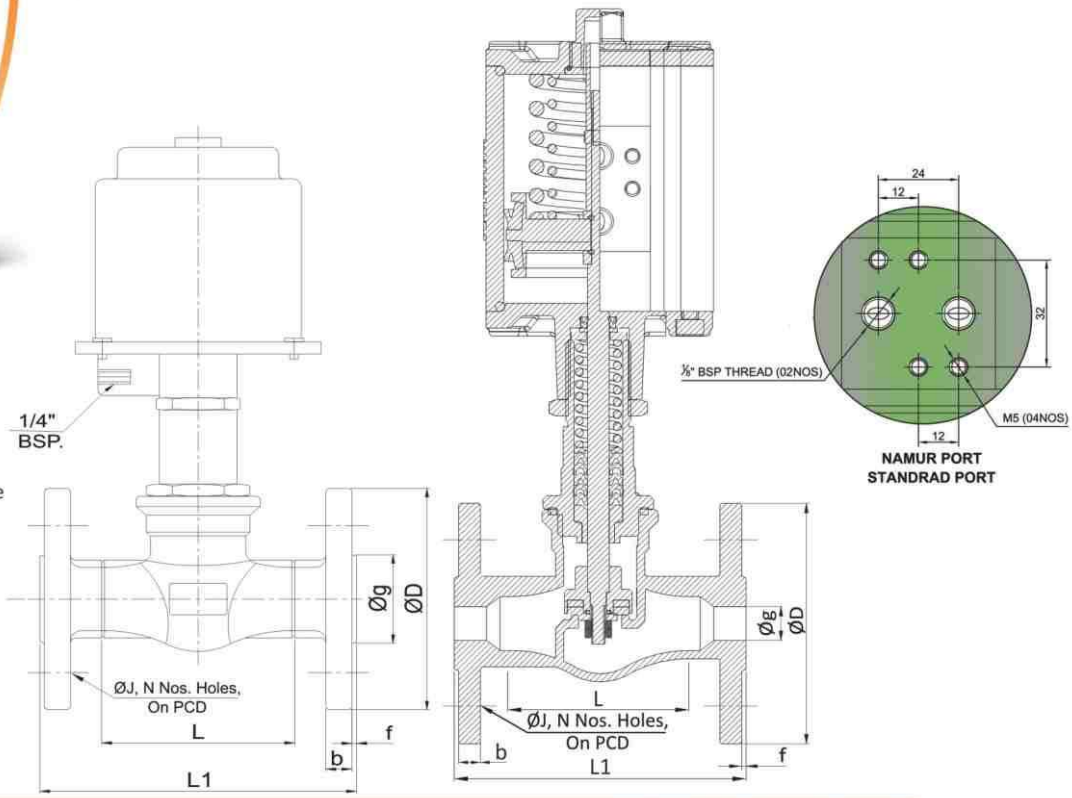

Dimensions : (All Dimensions are in mm)

Valve Model	Size		S/E	F/E	Port	ØD	b	Øg	f	ØJ	N	PCD	Weight	
	Inch	MM	L	L1									S/E	F/E
GKS/GKF/AGS/AGF - 15	1/2"	15	65	107.9	12.5	90	8	37.9	2	15.9	04	60.3	1.00	1.82
GKS/GKF/AGS/AGF - 20	3/4"	20	75	117.3	20	100	8.9	42.9	2	15.9	04	69.9	1.40	2.06
GKS/GKF/AGS/AGF - 25	1"	25	85	127	24	110	9.6	50.8	2	15.9	04	79.4	1.74	3.00
GKS/GKF/AGS/AGF - 32	1.1/4"	32	110	139.7	30	115	11.2	63.5	2	15.9	04	88.9	2.12	3.80
GKS/GKF/AGS/AGF - 40	1.1/2"	40	114	165.1	37	125	12.7	73	2	15.9	04	98.4	2.36	4.78
GKS/GKF/AGS/AGF - 50	2"	50	125	177.8	49	150	14.3	92.1	2	19.05	04	120.7	3.00	6.64
GKS/GKF/AGS/AGF - 65	2.1/2"	65	--	190.5	64	180	15.9	104.8	2	19.05	04	139.7	-	-
GKS/GKF/AGS/AGF - 80	3"	80	--	203.2	75	190	17.5	127	2	19.05	04	152.4	-	-
GKS/GKF/AGS/AGF - 100	4"	100	--	228.6	98	230	22.3	157.2	2	19.05	08	190.5	-	-

Note : Since, constant worldwide advancement in technology, We keep our rights reserved to make changes time to time in Technical specifications and Dimensions without prior notice.

Pub. on: January, 2015 (Rev.-01)

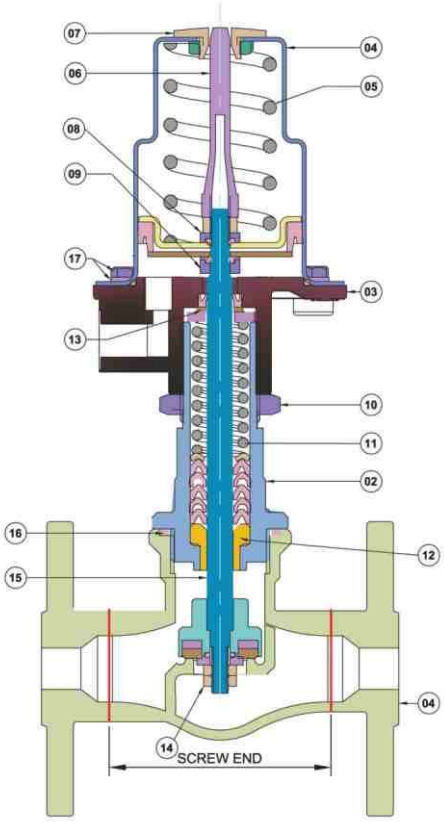

Description

No.	DESCRIPTION	Material	Qty.
1	Body	CF8 / CF8M	01
2	Bonnet	CF8 / CF8M	01
3	Flange	Allu. Alloy	01
4	Cap	S. S. 304	01
5	Piston Spring (RH)	Spring Steel	01
6	Piston Indicator	Nylon	01
7	Piston Indicator Guide & Nut	Nylon	01
8	Piston Collar (Small)	Brass	01
9	Piston Collar (Big)	Brass	01
10	Lock Nut For Flange	M. S.	01
11	Spring For Bonnet	S. S. 304	01
12	"T" Bush (Guide Bush) Bonnet	PTFE + C	01
13	Flange Flat Washer (Small)	NBR	01
14	Lock Nut (Plug)	S. S. 304	01
15	Plug + Shaft	S. S. 304	01
16	Teflon For Body (Sealing Gasket)	PTFE	01
17	Piston Cap Hex Bolt & Spring Washer	S. S. 304	12

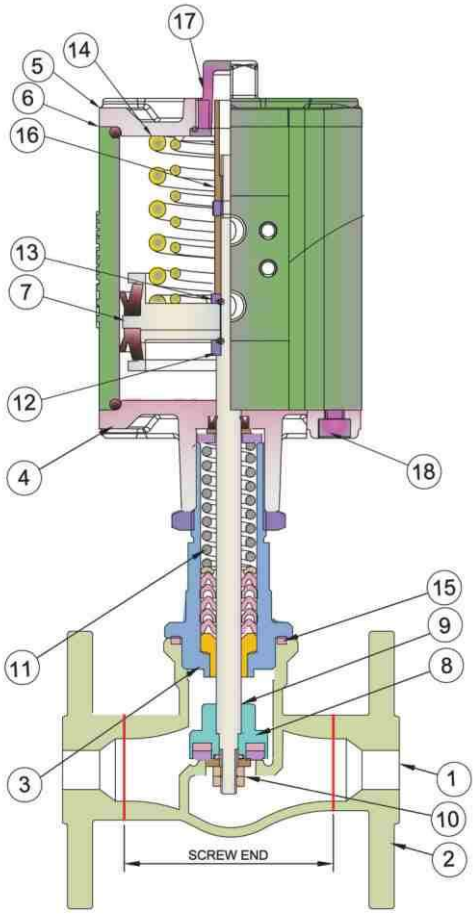

Description

No.	DESCRIPTION	Material	Qty.
01	Body	CF8 / CF8M	01
02	F/E End Connector	CF8 / CF8M	01
03	Bonnet	CF8 / CF8M	01
04	Flange Bottom Cover	CF8 / CF8M	01
05	Flange Top Cover	CF8 / CF8M	01
06	Act. Cap	Aluminium	01
07	Piston	Aluminium	01
08	Plug	S. S. 304	01
09	Plug + Piston Shaft	S. S. 304	01
10	Lock Nut For Plug	S. S. 304	01
11	Spring For Bonnet	M. S.	01
12	Piston Collar (Big)	Brass	01
13	Piston Collar (Small)	Brass	01
★14	Spring For Piston	Spring Steel	01
15	Teflon For Body	PTFE	01
16	Indicator For Piston	Nylon / Aluminium	01
17	Dom Indicator	Nylon	01
18	Socket Head Cap Screw	STD.	08

★ These Item (Spring) Not Applicable In Double Acting Actuator

Pub. on: January, 2015 (Rev.-01)

2/2 - 3/2 Way Pneumatic Single & Double Acting

Straight Type Mixing & Diverting High Pressure Control Valve

Catalogue No.
APL / 1043

aira
VALVE AUTOMATION
ISO 9001 CO.

"aira"

offers ON/OFF Valve in compact Design for mixing and or diverting three way application.

Size Range : 1/2" to 2.1/2" Screwed / Flanged

3LCS / 3LCF TYPES	
Normally Close	Energised To Open
Normally Open	Energised To Close

3ACS / 3ACF TYPES
Double Acting
Single Acting

Actuator Specification	
Port Connection	1/4" BSP (NPT On Request)
Operating Pressure	4.5 to 7 BAR (1/2" to 2") 5 to 7 Bar (2.1/2")
Operating Cycles	350 to 650 Cycles / Hr.

Valve Specification	
Body Test Pressure	42 Bar Maximum
Working Pressure	Refer to Table
Working Temperature	On Steam - Continuos 155 °C, Intermitted 180 °C with Teflon Seating Buna Nitrile 80 °C, EPDM 120 °C, Viton 220 °C
Leakage	As Steam ANSI B 16.104 - 1976 Teflon Seating Class IV for Other Soft Seating Class VI Drop Tight / Bubble Tight

Technical Specification Table

Valve Model	Size		Orifice mm	Max. Oper. Press. Bar	Flow Factor Kv M3/hr	Actuator Bore mm	Air Consumption Lit./ Cycle	Weight (Approx.)	
	Inch	MM						S/E	F/E
3CVS / 3CVF - 15	1/2"	15	15	10	3.3	70	0.151	1.760	3.000
3CVS / 3CVF - 20	3/4"	20	18	10	4.7	70	0.151	2.220	3.560
3CVS / 3CVF - 25	1"	25	23	10	8.5	70	0.162	3.000	4.900
3CVS / 3CVF - 40	1.1/2"	40	36	10	22.5	100	0.309	7.320	10.240
3CVS / 3CVF - 50	2"	50	45	----	35	100	0.325	10.440	14.560
3CVS / 3CVF - 65	2.1/2"	65	59.5	----	----	120	----	----	-----

For Any Different Technical Requirement - Available On Request

Accessories :

- 3/2 & 5/2 Way Namur Solenoid Valve
- Pilot Valve
- On / Off Type Limit Switch
- Combination (Filter + Regulator)
- Moisture Separator
- Quick Exhaust Valve

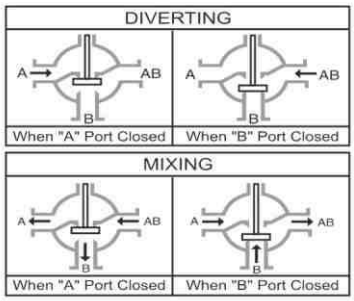

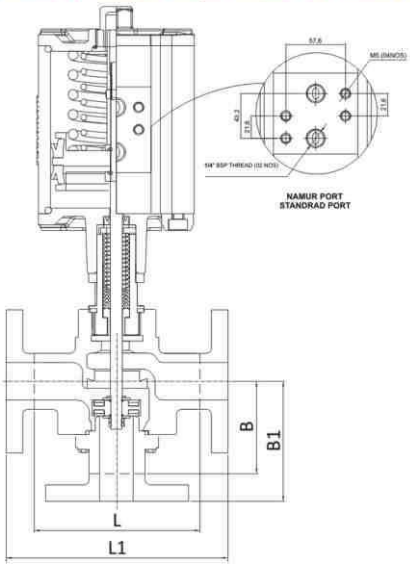

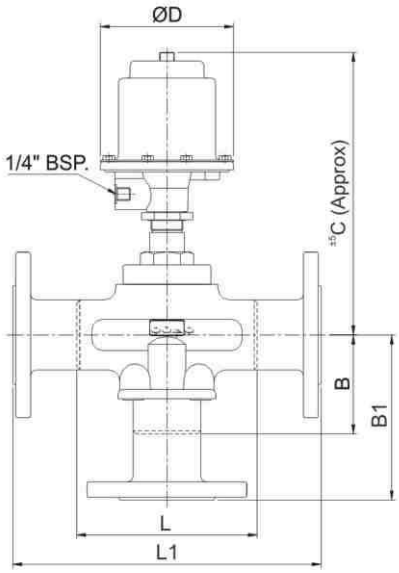

OPERATIONAL & INSTALLATION GUIDELINE

In Normal condition "A" port is closed. In such condition "AB" port is connected to "B" port. When the actuator is energised, the "B" port is closed and "AB" port is connected to "A" port. This way the "Diverting" action AB TO B and AB TO A can be achieved.

In Normal condition "B" port is closed. In such condition "A" port is connected to "AB" port. When the actuator is energised, the "A" port is closed and "B" port is connected to"AB" port. This way the "Mixing" action A TO AB and B TO AB can be achieved.

Dimensions : (All Dimensions are in mm)

Valve Model	Size		3CVS L	3CVF L1	B	B1	C	ØD
	Inch	MM						
3CVS / 3CVF / 3ACS / 3ACF - 15	15	1/2"	85	151	50	83	185	102
3CVS / 3CVF / 3ACS / 3ACF - 20	20	3/4"	110	185	66	130.5	194	102
3CVS / 3CVF / 3ACS / 3ACF -25	25	1"	120	189	72	106.5	204	102
3CVS / 3CVF / 3ACS / 3ACF - 40	40	1.1/2"	150	232	91	132	285	134
3CVS / 3CVF / 3ACS / 3ACF - 50	50	2"	190	283	100	146.5	292	164
3CVS / 3CVF / 3ACS / 3ACF - 65	65	2.1/2"	243	On Req.	108	On Req.	On Req.	164

Note : Since, constant worldwide advancement in technology, We keep our rights reserved to make changes time to time in Technical specifications and Dimensions without prior notice.

Pub. on: January, 2015 (Rev.-01)

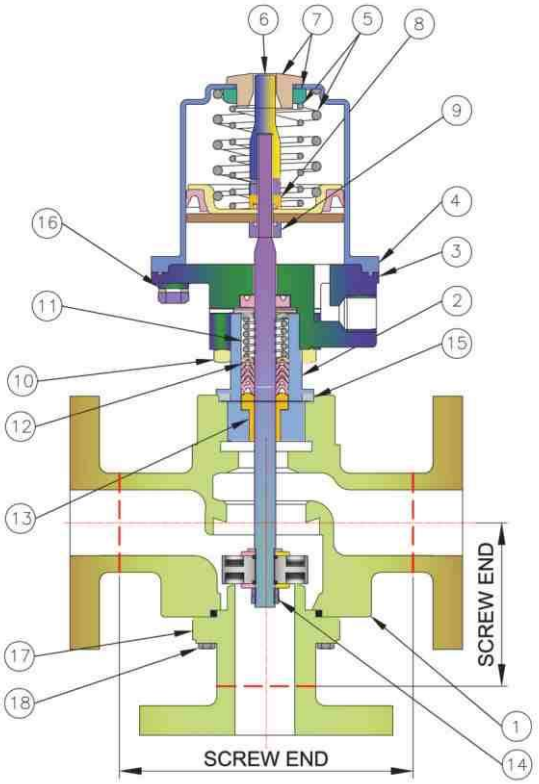

Description

No.	DESCRIPTION	Material	Qty.
01	Body	CF8 / CF8M	01
02	Bonnet	CF8 / CF8M	01
03	Flange	CF8 / CF8M / Alu.	01
04	Cap	S. S. 304	01
05	Piston Spring (RH)&(LH)	Spring Steel	01
06	Piston Indicator	Nylon	01
07	Piston Indicator Guide Nut	Nylon	01
08	Piston Collar (Small)	Brass	01
09	Piston Collar (Big)	Brass	01
10	Lock Nut For Flange	M. S.	01
11	Spring For Bonnet	S. S. 304	01
12	Bonnet V - Seal	PTFE	03
13	"T" Bush (Guide Bush) Bonnet	PTFE + C	01
14	Lock Nut (Plug)	S. S. 304	02
15	Teflon For Body (Sealing Gasket)	PTFE	01
16	Piston Cap Hex Bolt & Spring Washer	S. S. 304	06
17	Connector	CF8 / CF8M	01
18	Connector Hex Bolt & Spring Washer	S. S. 304	04

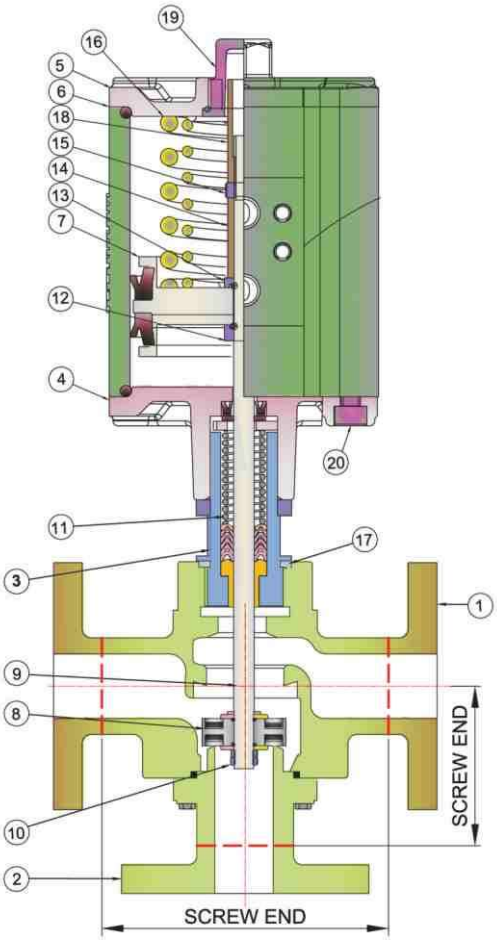

Description

No.	DESCRIPTION	Material	Qty.
01	Body	CF8 / CF8M	01
02	F/E End Connector	CF8 / CF8M	01
03	Bonnet	CF8 / CF8M	01
04	Flange Bottom Cover	CF8 / CF8M	01
05	Flange Top Cover	CF8 / CF8M	01
06	Act. Cap	Aluminium	01
07	Piston	Aluminium	01
08	Plug	S. S. 304	01
09	Plug + Piston Shaft	S. S. 304	01
10	Lock Nut For Plug	S. S. 304	01
11	Spring For Bonnet	M. S.	01
12	Piston Collar (Big)	Brass	01
13	Piston Collar (Small)	Brass	01
14	Piston Long Collar	S. S. / Alu.	01
15	Piston Collar Lock Nut	S. S. 304	01
★16	Spring For Piston	Spring Steel	01
17	Teflon For Body	PTFE	01
18	Indicator For Piston	Nylon / Aluminium	01
19	Dom Indicator	Nylon	01
20	Socket Head Cap Screw	STD.	08

★ These Item (Spring) Not Applicable In Double Acting Actuator

Pub. on: January, 2015 (Rev.-01)

2/2 - 3/2 Way Pneumatic Single & Double Acting

Straight Type Mixing & Diverting Medium Pressure Control Valve

Catalogue No.
APL / 1011

aira
VALVE AUTOMATION
ISO 9001 CO.

"aira"

offers ON/OFF Control Valve in compact Design for mixing and or diverting three way application

Size Range : 1/2" to 4" Screwed / Flanged

Actuator Specification	
Port Connection	1/4" BSP (NPT On Request)
Operating Pressure	4.5 to 7 BAR (1/2" to 2"), 5 to 7 Bar (2.1/2" to 4")
Operating Cycles	350 to 650 Cycles / Hr.

3LCS / 3LCF TYPES	
Normally Close	Energised To Open
Normally Open	Energised To Close

3ACS / 3ACF TYPES
Double Acting
Single Acting

Technical Specification Table

Size Inch	Size MM	Orifice mm	Max. Oper. Press. Bar	Flow Factor Kv M3/hr	Actuator Bore mm	Air Consumption Lit./ Cycle
1/4"	6	14	10	3.3	50	0.151
1/2"	15	14	10	3.3	50	0.151
3/4"	20	15	10	4.7	50	0.151
1"	25	22	10	8.5	70	0.172
1.1/4"	32	28	10	22.5	70	0.172
1.1/2"	40	36	10	22.5	70	0.172
2"	50	45	7	35	70	0.309
2.1/2"	65	60	-	-	100	0.329
3"	80	60	-	-	120	-
4"	100	78	-	-	120	-

For Any Different Technical Requirement - Available On Request

Accessories :

- 3/2 & 5/2 Way Namur Solenoid Valve
- Pilot Valve
- On / Off Type Limit Switch
- Combination (Filter + Regulator)
- Moisture Separator
- Quick Exhaust Valve

Valve Specification	
Body Test Pressure	16 Bar Maximum
Working Pressure	Refer to Table
Working Temperature	On Steam - Continuos 155 °C, Intermitted 180 °C with Teflon Seating Buna Nitrile 80 °C, EPDM 120 °C, Viton 220 °C
Leakage	As Steam ANSI B 16.104 - 1976 Teflon Seating Class IV for Other Soft Seating Class VI Drop Tight / Bubble Tight

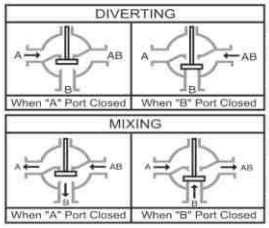

OPERATIONAL & INSTALLATION GUIDELINE

In Norma condition "A" port is closed. In such condition "AB" port is connected to "B" port. When the actuator is energsied, the "B" port is closed and "AB" port is connected to "A" port. This way the "Diverting" action AB to B and AB to A can be achieved. In Normal condition "B" port is closed. In such condition "A" port is connected to "A" port. When the actuator is energsied, the "A" port is closed and "B" port is connected to "AB" port. This way the "Mixing" action A to AB and B to AB can be achieved.

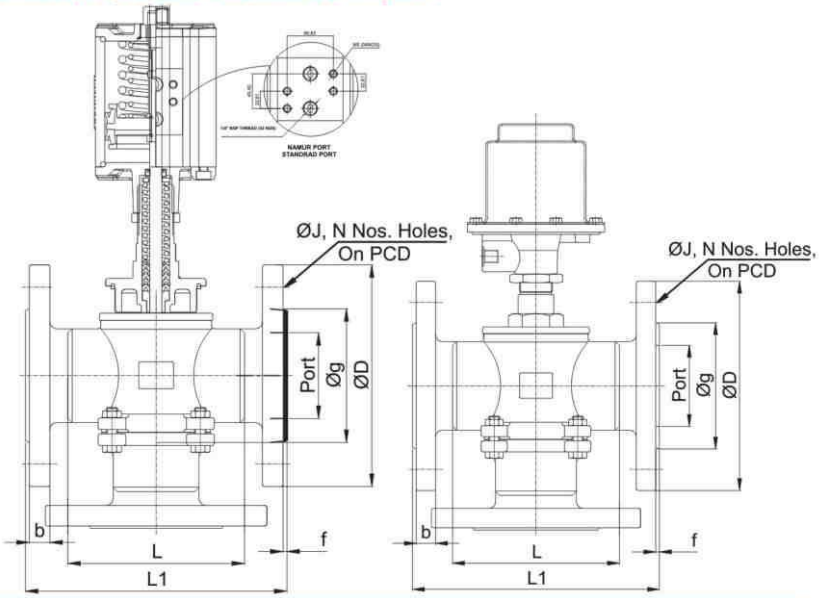

Dimensions : (All Dimensions are in mm)

Valve Model	Size Inch	Size MM	3LCS L	3LCF L1	Port	ØD	b	Øg	f	ØJ	N	PCD	Weight (Approx.) S/E	Weight (Approx.) F/E
3LCS/3LCF/3ALCS/3ALCF - 15	15	1/2"	70.5	108	12.5	90	8	34.9	2	15.9	4	60.3	1.240	2.750
3LCS/3LCF/3ALCS/3ALCF - 20	20	3/4"	85.5	117.3	17	100	8.9	42.9	2	15.9	4	69.9	1.280	3.000
3LCS/3LCF/3ALCS/3ALCF - 25	25	1"	90.5	127	24	110	9.6	50.8	2	15.9	4	79.4	2.000	4.000
3LCS/3LCF/3ALCS/3ALCF - 32	32	1.1/4"	98.5	139.7	30	115	11.2	63.5	2	15.9	4	88.9	2.640	9.000
3LCS/3LCF/3ALCS/3ALCF - 40	40	1.1/2"	115	165.1	37	125	12.7	73	2	15.9	4	98.4	3.000	9.000
3LCS/3LCF/3ALCS/3ALCF - 50	50	2"	120	177.8	49	150	14.3	92.1	2	19.05	4	120.7	3.620	13.500
3LCS/3LCF/3ALCS/3ALCF - 65	65	2.1/2"	148	213	64	180	15.9	104.8	2	19.05	4	139.7	9.060	17.260
3LCS/3LCF/3ALCS/3ALCF - 80	80	3"	177	230	75	190	17.5	127	2	19.05	4	152.4	11.440	20.460

Note : Since, constant worldwide advancement in technology, We keep our rights reserved to make changes time to time in Technical specifications and Dimensions without prior notice.

Pub. on: January, 2015 (Rev.-01)

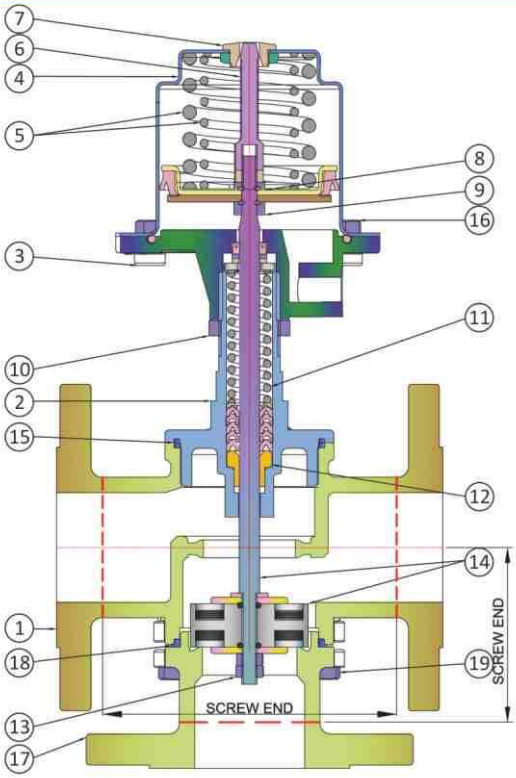

Description

No.	DESCRIPTION	Material	Qty.
1	Body	CF8 / CF8M	01
2	Bonnet	CF8 / CF8M	01
3	Flange	CF8 / Alu.	01
4	Cap	S. S. 304	01
5	Piston Spring (RH) & (LH)	Spring Steel	01
6	Piston Indicator	Nylon	01
7	Piston Indicator Guide & Nut	Nylon	01
8	Piston Collar (Small)	Brass	01
9	Piston Collar (Big)	Brass	01
10	Lock Nut For Flange	M. S.	01
11	Spring For Bonnet	S. S. 304	01
12	"T" Bush (Guide Bush) Bonnet	PTFE + C	01
13	Lock Nut (Plug)	S. S. 304	01
14	Plug + Shaft	S. S. 304	01
15	Teflon For Body (Sealing Gasket)	PTFE	01
16	Piston Cap Hex Bolt & Spring Washer	S. S. 304	06
17	Connector	CF8 / CF8M	01
18	Teflon For Connector (Sealing Gasket)	CF8 / CF8M	01
19	Piston Cap Hex Bolt & Spring Washer	S. S. 304	04

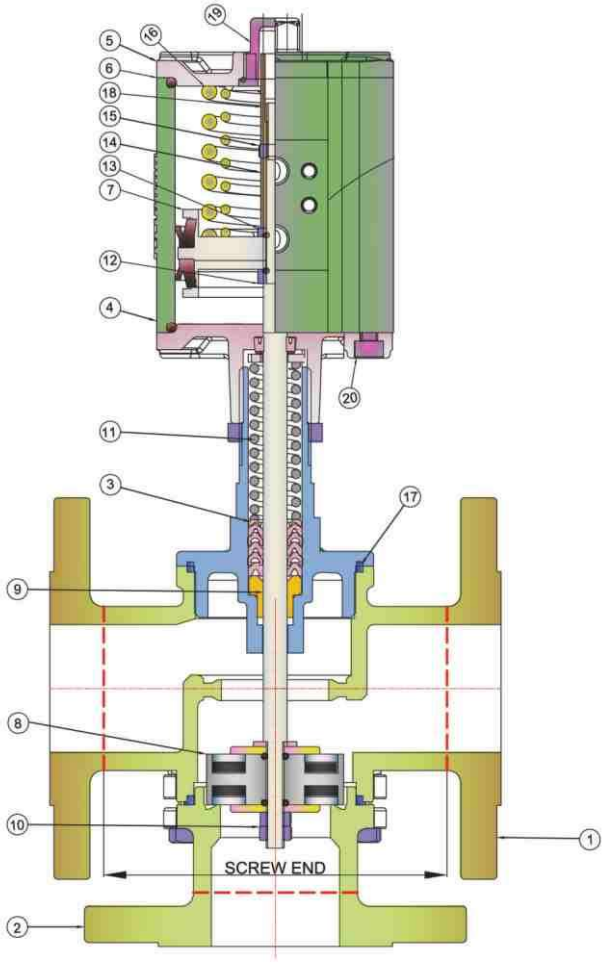

Description

No.	DESCRIPTION	Material	Qty.
1	Body	CF8 / CF8M	01
2	F/E End Connector	CF8 / CF8M	01
3	Bonnet	CF8 / CF8M	01
4	Flange Bottom Cover	CF8 / CF8M	01
5	Flange Top Cover	CF8 / CF8M	01
6	Act. Cap	Aluminium	01
7	Piston	Aluminium	01
8	Plug	S. S. 304	01
9	Plug + Piston Shaft	S. S. 304	01
10	Lock Nut For Plug	S. S. 304	01
11	Spring For Bonnet	M. S.	01
12	Piston Collar (Big)	Brass	01
13	Piston Collar (Small)	Brass	01
14	Piston Long Collar	S. S. / Alu.	01
15	Piston Collar Lock Nut	S. S. 304	01
16	Spring for Piston	Spring Steel	01
17	Teflon for Body	PTFE	01
18	Indicator For Piston	Nylon / Alu.	01
19	Dom Indicator	Nylon	01
20	Socket Head Cap Screw	STD.	08

Pub. on: January, 2015 (Rev.-01)

Pneumatic Cylinder Operated

Pharma Diaphragm Valve T. C. End

Catalogue No.
APL / 2035

aira
VALVE AUTOMATION
ISO 9001 CO.

"aira"

offers Pneumatic Cylinder Operated Investment Casted Diaphragm valve For Your Bio Pharma.

Size Range : 1/2" to 3"

Features :

- The Diaphragm provides the body seal as well as the seat seal. There are no paths the outside environment an as such the valve is suitable for aseptic processes.
- As the valve is closed a pressure pad which supports the diaphragm moves towards the sealing face on the body. As the pressure plate moves the diaphragm flexes and is forced down onto the seal area in the center of the body thus closing off the flow path through the body.
- The inter - relationship of body to the pressure plate prevent over compression of the diaphragm.
- The valve can be actuated either manually or pneumatically and controlled by control tops and solenoid valves.

Application :

- Diaphragm valves, manually or pneumatically operated, and specially design for use on hygienic and aseptic process in the pharmaceutical industries.
- The valves is excellent for flow control as well as for Open / Close duties.

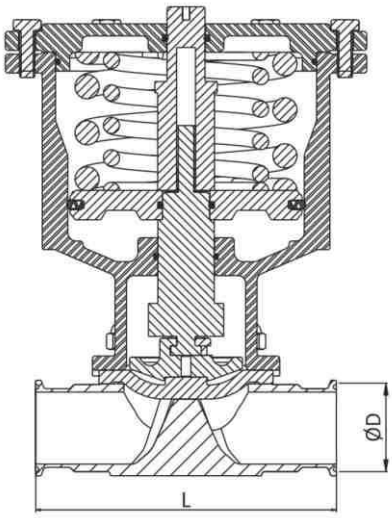

Dimensions : (All Dimensions are in mm)

Valve Model	Size		L	ØD
	Inch	MM		
PDV - T - 15	1/2"	15	108	34
PDV - T - 20	3/4"	20	117	34
PDV - T - 25	1"	25	127	50.5
PDV - T - 32	1.1/4"	32	146	50.5
PDV - T - 40	1.1/2"	40	159	50.5
PDV - T - 50	2"	50	190	64
PDV - T - 65	2.1/2"	65	216	91
PDV - T - 80	3"	80	254	106

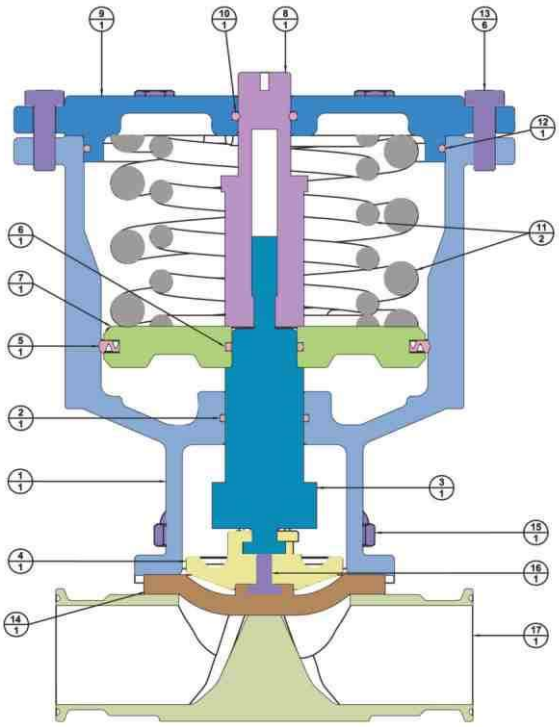

No.	DESCRIPTION	Material	Qty.
1	Body	CF8 / CF8M / CF3M	01
2	Body O - Ring	NBR	01
3	Stem Top	Aluminium	01
4	Compressor	S. S.	01
5	Piston	Aluminium	01
6	Piston O - Ring	NBR	01
7	V - Seal	NBR	01
8	Stem Bottom	Aluminium	01
9	Cover	CF8 / CF8M	01
10	Cover O - Ring	NBR	01
11	Spring	S. S.	02
12	Body Cover O - Ring	NBR	01
13	Hex Bolt	S. S. 304	06
14	Diaphragm	NBR	01
15	Cap Nut	S. S. 304	04
16	Bolt For Diaphragm	S. S. 304	01
17	PDV Body	CF8 / CF8M	01

Pub. on: January, 2015 (Rev.-01)

PNEUMATIC DIAPHRAGM OPERATED

Rubber Lined Diaphragm Valve

Catalogue No.
APL / 2036

aira®
VALVE AUTOMATION
ISO 9001 CO.

"aira"

Offers Pneumatic Operated Rubber Lined Diaphragm Valve For Waste & Water Treatment Plants, Filtration Plants, Chlorination Plants, etc....

Size Range : 1/2" to 8" Flanged

Design Features :

- The Diaphragm Valve is essentially a simple pinch clamp, closed by pressing a flexible diaphragm against transverse weir, when fully closed, the diaphragm seats against the weir providing a leak tight closure.
- The diaphragm valves are recommended for handling sticky and viscous fluids, slurries and highly corrosive and hazardous and other hard to handle mediums or where tight closure is prime factor, It is the most ideal valve to handle fluids that require high purity and should remain free from contamination.
- The diaphragm valve is simple pinch type valve and of low pressure type because of large area of diaphragm and is extensively used for both on/off and throttling service and finds its application in Water treatment plants, Filtration plants, Chlorination Plants etc.....

Specification	
Valve Design	Confirm to BS - 5156 (Series "S")
Body Type Valve Size	Weir (Lined)
End Connection	15mm to 200mm (1/2" to 8")
Body Material	Cast Iron, Cast Steel, S.S. 304, S. S. 316 etc...
Lining Material	Ebonite, EPDM, Glass, PFA etc...
Lining Hardness	Ebonite - 95° ±5 Shore A / D 62 Glasslining
Lining Thickness	15 to 65mm Valve -3.0mm, 80 to 100mm -3.5mm, 125mm to 150mm -4.0, 200 -5.0mm
Body Diaphragm	Neoprene, Teflon Backed with Neoprene, Butyl, Viton, EPDM, Hyplon, Nitrile
Leakage Rate	As per ANSI B 16.104 Class VI (100% Leak Tight)
Temperature	-30 °C to 80 °C
Flow Characteristics	On / Off, Throttling
Testing Standard	BS 6755 - Part I
Actuator Type	Diaphragm Cylinder or Piston (Upto 50 mm)
Actuator Action	Direct / Reverse Acting, Normally Open (Air to Close) Normally Open (Air to Open)
Air Supply	20 - 65 PSIG (1.4 to 4.5 Kg/cm²)
Accessories	Top mounted Handwheel, Limit Switches, Proximity Switches, Air Set, Valve Positioner, Air Lock Valve etc....

Installation

The valve should be installed preferably in a straight run of the pipe, a few diameters away form the bends. The preferred position is with actuator vertically above of below the valve body. It may also be installed in a horizontal or angied position provide the diaphragm actuator is supported. Necessary clearance should be provide above the actuator to permit removal for servicing or for inspection of the valve internal. The supply pressure to the actuator be either 35 PSIG or as per rating indicated on the name plate. for control application, positioner mounted are piped and adjusted at the factor.

Final Check

After the valve has been installed, Check the operations for full stroke travel as indicated on the name plate. Check for air leaks in air line connection. open and close the valve two of three times to ensure proper operation. Before commissioning the process flow, It would be advisable to use conical filter or other temporary devices to avoid damage to the rubber lining or body diaphragm as the fluid is likely to carry foreign solid material during testing or commissioning of the plant. This care is particularly important with neoprene or other soft elastomer lining. Special care has to be exercised with glass lining construction. It is generally not desirable to use excessive air pressure to the actuator than specified as it would reduce the life of the body diaphragm and also caused undue force on the actuator diaphragm.

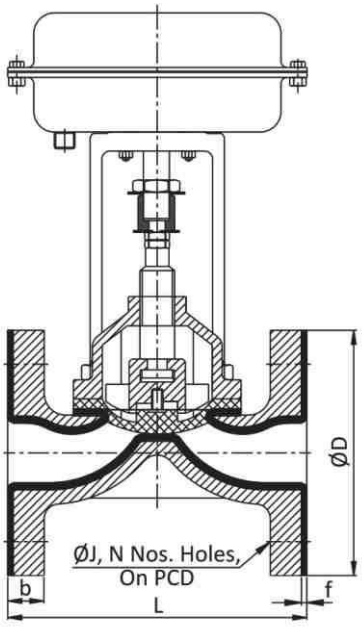

Dimensions : (All Dimensions are in mm)

Valve Model	Size Inch	Size MM	L	t	ØD	b	ØJ	N	PCD
RLPDV-F-15	1/2"	15	108	3	90	10	15.9	4	60.3
RLPDV-F-20	3/4"	20	117	3	100	10.9	15.9	4	69.9
RLPDV-F-25	1"	25	127	3	110	11.6	15.9	4	79.4
RLPDV-F-32	1.1/4"	32	146	3	115	13.2	15.9	4	88.9
RLPDV-F-40	1.1/2"	40	159	3	125	14.7	15.9	4	98.4
RLPDV-F-50	2"	50	190	3	150	16.3	19.05	4	120.7
RLPDV-F-65	2.1/2"	65	216	3	180	17.9	19.05	4	139.7
RLPDV-F-80	3"	80	254	3	190	19.5	19.05	4	152.4
RLPDV-F-100	4"	100	305	3	230	24.3	19.05	8	190.5
RLPDV-F-125	5"	125	356	3	225	24.3	22.2	8	215.9
RLPDV-F-150	6"	150	406	3	280	25.9	22.2	8	241.3
RLPDV-F-200	8"	200	521	3	345	29	22.2	8	298.5

Note : Since, constant worldwide advancement in technology, We keep our rights reserved to make changes time to time in Technical specifications and Dimensions without prior notice.

Pub. on: January, 2015 (Rev.-01)

2/2 - 3/2 Way Pneumatic Cylinder Operated

Control Valve

Catalogue No.
APL / 2037

aira
VALVE AUTOMATION
ISO 9001 CO.

"aira"

offers 3/2 - 2/2 way pneumatic Cylinder operated precise Regulating design control valve for Steam & Water Upto 200 °C

Size Range : 1/2" to 4" Flanged

Valve Specification	
Type Of Valve	Globe Type 2/2 Way - 3/2 Way
Trim / Plug	S. S. 304
Working Pressure	7 Kg/cm²
Working Temperature	Upto 220 °C Max.
Plug Design	On - Off Type
Testing Code	FCI 70.2
End Connection	ASME B16.5
Leakage Class	Class VI
Type Of Bonnet	STD

Actuator Specification	
Type	Single Acting Cylinder
Barrel	Aluminium
Shaft	EN 8 Hard Chrome Plated
Seals	Buna - N
End Cover	Cast Iron
Working Pressure	4.5 Kg/cm²

No.	DESCRIPTION	Material
1	Body	WCB
2	Bonnet	WCB
3	Tail Piece / Cover Plate	WCB
4	Seat Ring	S. S. 304
5	T. S. Guide	S. S. 304
6	Seat Gasket	S. S. 304 Spiral Wound
7	Body Gasket	S. S. 304 Spiral Wound
8	Stem	S. S. 304
9	Stud + Nut	ASTM A 193 / B7-2H
10	Stem Packing	Wire Braided Graphite
11	Gland + Nut	S. S. 304
12	Travel Indicator	S. S. 202
13	Connecting Nut	S. S. 304
14	T. S. Plug	S. S. 304
15	Seat	CFT

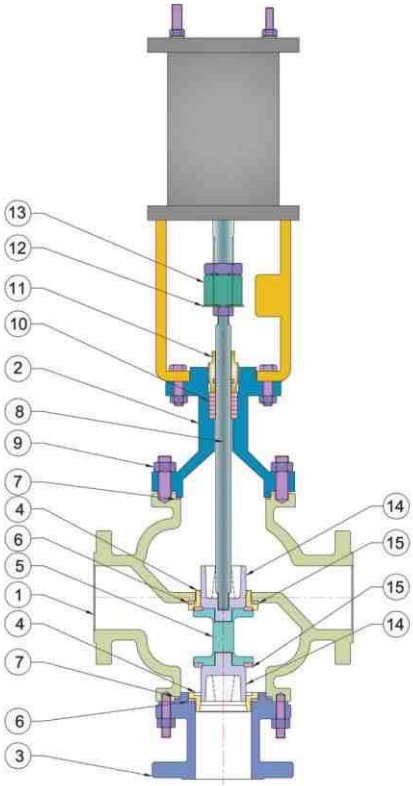

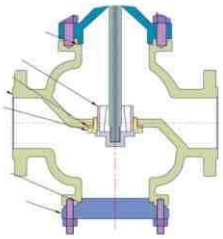

2/2 Way Body

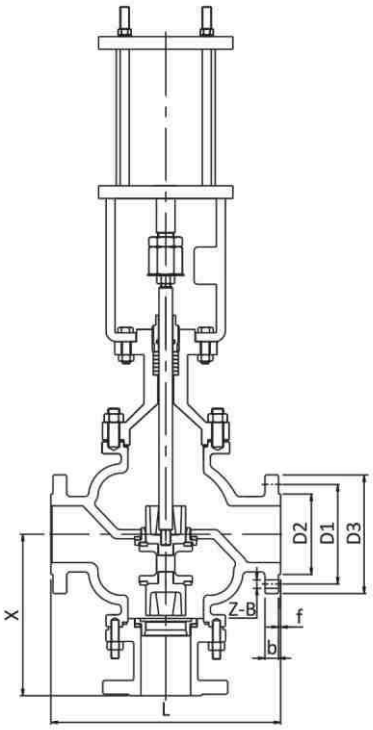

Dimensions : (All Dimensions are in mm)

Valve Model	Size Inch	Size MM	L	D1	D2	D3	b	f	*X	Z-B
PLC - 15	1/2"	15	184	60.3	34.9	90	8	2	145	4-15.9
PLC - 20	3/4"	20	184	69.9	42.9	100	8.9	2	145	4-15.9
PLC - 25	1"	25	184	79.4	50.8	110	9.6	2	145	4-15.9
PLC - 32	1.1/4"	32	222	88.9	63.5	115	11.2	2	160	4-15.9
PLC - 40	1.1/2"	40	222	98.4	73	125	12.7	2	160	4-15.9
PLC - 50	2"	50	254	120.7	92.1	150	14.3	2	180	4-19.05
PLC - 65	2.1/2"	65	276	139.7	104.8	180	15.9	2	205	4-19.05
PLC - 80	3"	80	298	152.4	127	190	17.5	2	205	4-19.05
PLC - 100	4"	100	352	190.5	157.2	230	22.3	2	240	8-19.05

*** "X" Dimension only 3/2 Way Valve**

Note : Since, constant worldwide advancement in technology, We keep our rights reserved to make changes time to time in Technical specifications and Dimensions without prior notice.

Pub. on: January, 2015 (Rev.-01)

"aira"

offers 3/2 - 2/2 way pneumatic Cylinder operated control valve for thermic fluid & High Temperature Application Upto 450 °C

Size Range : 1/2" to 4" Flanged

Valve Specification	
Type Of Valve	Globe Type 2 Way / 3 Way
Body / Bonnet	ASTM A 216 Gr. WCB
Trim / Plug	S. S. 304
Working Pressure	7 Kg/cm²
Working Temperature	Upto 450 °C Max.
Plug Design	On - Off Type
Testing Code	FCI 70.2
End Connection	ASME B 16.5
Leakage Class	Class IV
Type Of Bonnet	Cooling Finned Bonnet

Actuator Specification	
Type	Single Acting Cylinder
Barrel	Aluminium
Shaft	EN 8 Hard Chrome Plated
Seals	Buna - N
End Cover	Cast Iron
Working Pressure	4.5 Kg/cm²

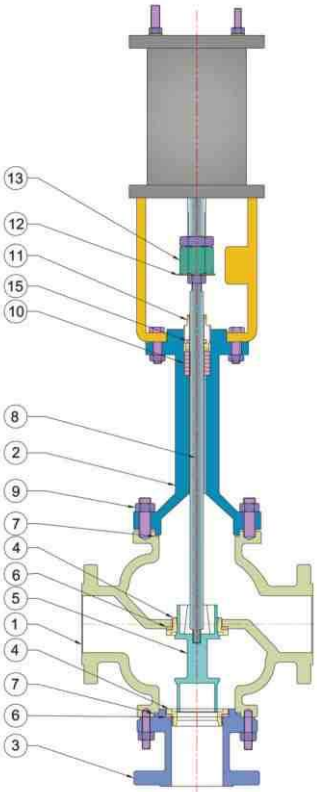

No.	DESCRIPTION	Material
1	Body	WCB
2	Bonnet	WCB
3	Tail Piece / Cover Plate	WCB
4	Seat Ring	S. S. 304
5	Plug	S. S. 304
6	Seat Gasket	S. S. 304 Spiral Wound
7	Body Gasket	S. S. 304 Spiral Wound
8	Stem	S. S. 304
9	Stud + Nut	ASTM A 193 / B7-2H
10	Stem Packing	Wire Braided Graphite
11	Gland Nut	S. S. 304
12	Travel Indicator	S. S. 202
13	Connector Nut	S. S. 304

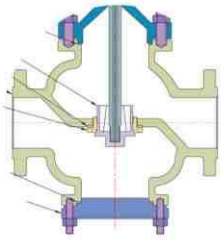

2/2 Way Body

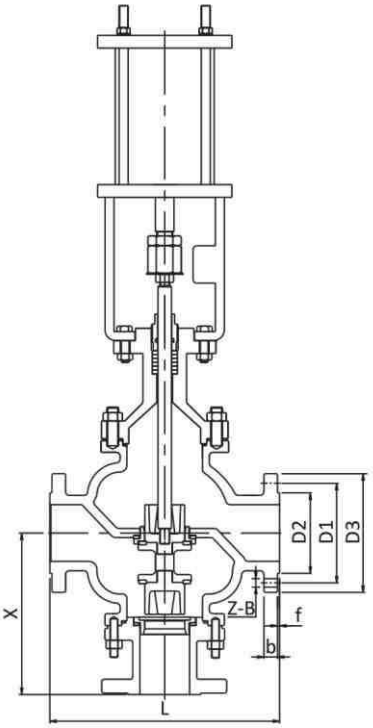

Dimensions : (All Dimensions are in mm)

Valve Model	Size Inch	Size MM	L	D1	D2	D3	b	f	*X	Z-B
PHC - 15	1/2"	15	184	60.3	34.9	90	8	2	145	4-15.9
PHC - 20	3/4"	20	184	69.9	42.9	100	8.9	2	145	4-15.9
PHC - 25	1"	25	184	79.4	50.8	110	9.6	2	145	4-15.9
PHC - 32	1.1/4"	32	200	88.9	63.5	115	11.2	2	160	4-15.9
PHC - 40	1.1/2"	40	222	98.4	73	125	12.7	2	160	4-15.9
PHC - 50	2"	50	254	120.7	92.1	150	14.3	2	180	4-19.05
PHC - 65	2.1/2"	65	276	139.7	104.8	180	15.9	2	205	4-19.05
PHC - 80	3"	80	298	152.4	127	190	17.5	2	205	4-19.05
PHC - 100	4"	100	352	190.5	157.2	230	22.3	2	240	8-19.05

*** "X" Dimension only 3/2 Way Valve**

Note : Since, constant worldwide advancement in technology, We keep our rights reserved to make changes time to time in Technical specifications and Dimensions without prior notice.

Pub. on: January, 2015 (Rev.-01)

2/2 - 3/2 Way Pneumatic Diaphragm Operated

On / Off Control Valve Low Temperature

Catalogue No.
APL / 1086

aira
VALVE AUTOMATION
ISO 9001 CO.

"aira"

offers 3/2 - 2/2 way pneumatic diaphragm operated on/off 220 °C Control Valve

Size Range : 1/2" to 6" Flanged

Valve Specification	
Trim Design	Quick Opening
Characteristic	ON - OFF
End Connection	Flanged end ASME B 16.5 CL 150 (300 / 600 Available On Request)
Pressure Rating	7 Kg/cm²
Temperature	Upto 220 °C Max.
Leakage	ASME B16.104 CL IV for Metal to Metal Seating / FCI 70.2

Diaphragm Actuator Specification	
Actuator	Diaphragm Type Single Acting
Working Pressure	2.5 to 3.5 Kg/cm²

Salient Feature :

- Excellent for On / Off Application
- Long Lasting Diaphragm material
- Easy maintenance
- Economy Price
- High Temperature 220 °C

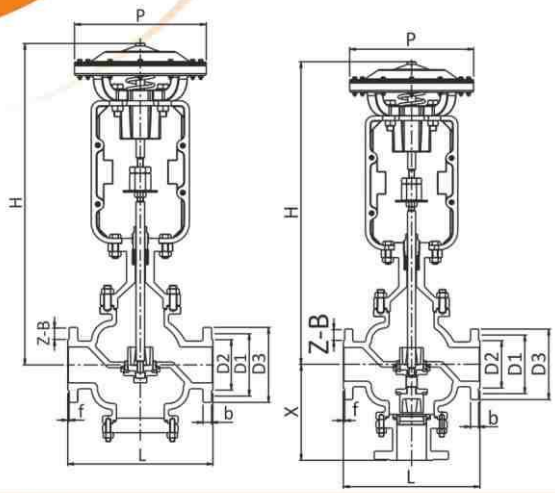

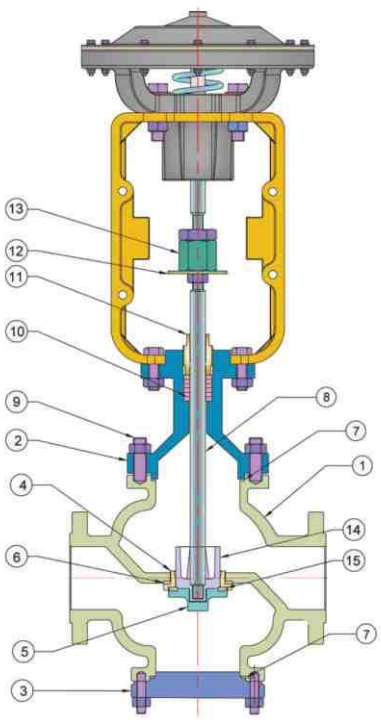

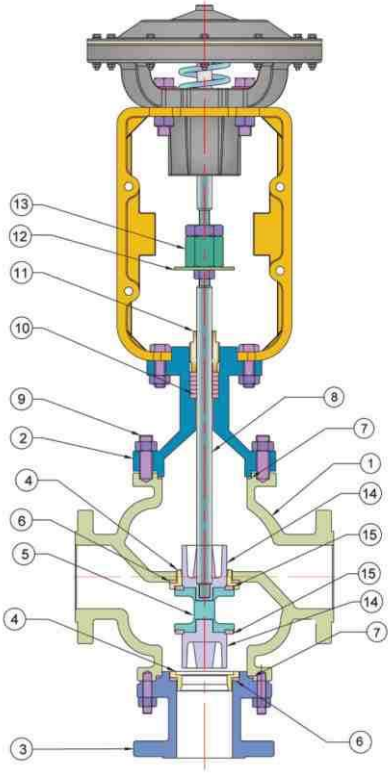

Dimensions : (All Dimensions are in mm)

Valve Model	Size Inch	Size MM	H	P	L	D1	D2	D3	b	f	Z-B	X
PKL - 15	1/2"	15	520	222	184	60.3	34.9	90	8	2	4-15.9	145
PKL - 20	3/4"	20	520	222	184	69.9	42.9	100	8.9	2	4-15.9	145
PKL - 25	1"	25	520	222	184	79.4	50.8	110	9.6	2	4-15.9	145
PKL - 32	1.1/4"	32	520	222	200	88.9	63.5	115	11.2	2	4-15.9	160
PKL - 40	1.1/2"	40	520	222	222	98.4	73	125	12.7	2	4-15.9	160
PKL - 50	2"	50	560	222	254	120.7	92.1	150	14.3	2	4-19.05	180
PKL - 65	2.1/2"	65	677	296	276	139.7	104.8	180	15.9	2	4-19.05	205
PKL - 80	3"	80	677	296	298	152.4	127	190	17.5	2	4-19.05	205
PKL- 100	4"	100	680	296	352	190.5	157.2	230	22.3	2	8-19.05	240
PKL- 150	6"	150	680	296	451	241.3	215.9	280	23.9	2	8-22-2	320

No.	DESCRIPTION	Material
1	Body	WCB / CF8 / CF8M
2	Bonnet	WCB / CF8 / CF8M
3	Tail Piece / Body Cover	WCB / CF8 / CF8M
4	Seat Ring	S. S. 304
5	T. S. Guide	S. S. 304
6	Seat Gasket	S. S. 304 Spiral Wound
7	Body Gasket	S. S. 304 Spiral Wound
8	Stem	S. S. 304
9	Stud + Nut	ASTM A193 / B7-2H
10	Stem Packing	Wire Braided Graphite
11	Gland Nut	S. S. 304
12	Travel Indicator	S. S. 302
13	Connecting Nut	S. S. 304
14	T. S. Plug	S. S. 304
15	Teflon	CFT

Note : Since, constant worldwide advancement in technology, We keep our rights reserved to make changes time to time in Technical specifications and Dimensions without prior notice.

Pub. on: January, 2015 (Rev.-01)

2/2 - 3/2 Way Pneumatic Diaphragm Operated

On / Off Control Valve High Temperature

Catalogue No.
APL / 1085

aira®
VALVE AUTOMATION
ISO 9001 CO.

"aira"

offers 3/2 - 2/2 way pneumatic diaphragm operated on/off 450 °C Valve for thermic fluid & High Temperature Application

Size Range : 1/2" to 6" Flanged

Valve Specification	
Trim Design	Quick Opening
Characteristic	ON - OFF
End Connection	Flanged end ASME B 16.5 CL 150 (300 / 600 Available On Request)
Pressure Rating	7 Kg/cm²
Temperature	Upto 450 °C Max.
Leakage	ASME B16.104 CL IV for Metal to Metal Seating / FCI 70.2
Type Of Bonnet	Cooling Finned

Diaphragm Actuator Specification	
Actuator	Diaphragm Type Single Acting
Working Pressure	2.5 to 3.5 Kg/cm²

Salient Features :

- Excellent for On / Off Application
- Long Lasting Diaphragm material
- Easy maintenance
- Economy Price
- High Temperature 450 °C

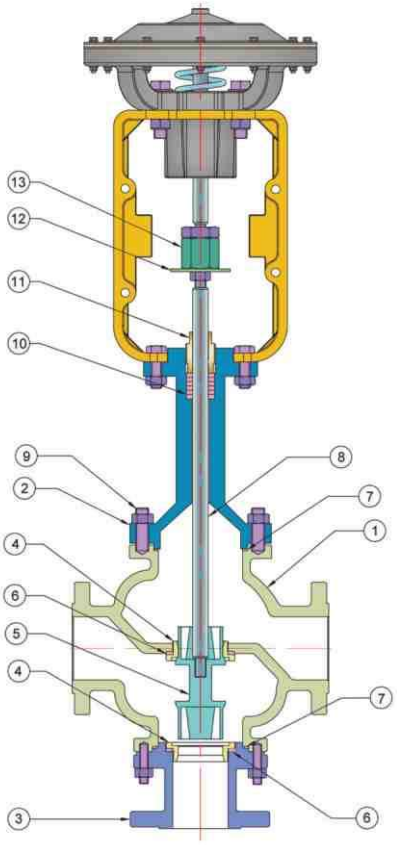

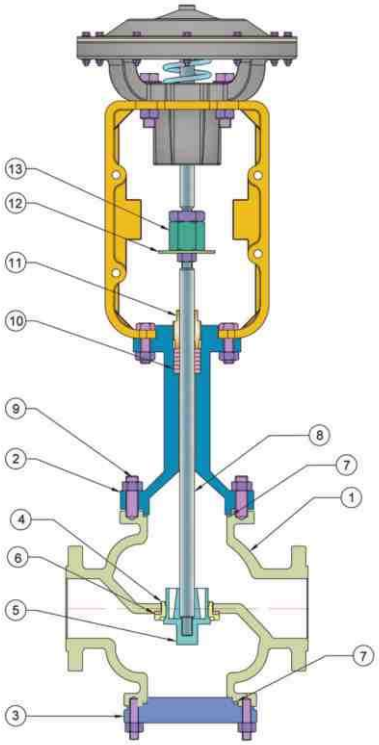

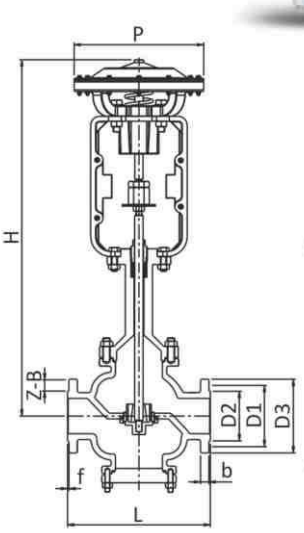

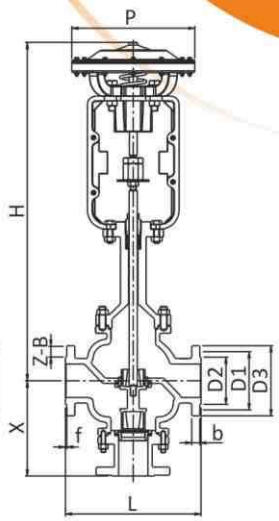

No.	DESCRIPTION	Material
1	Body	WCB / CF8 / CF8M
2	Bonnet	WCB / CF8 / CF8M
3	Tail Piece / Body Cover	WCB / CF8 / CF8M
4	Seat Ring	S. S. 304
5	T. S. Guide	S. S. 304
6	Seat Gasket	S. S. 304 Spiral Wound
7	Body Gasket	S. S. 304 Spiral Wound
8	Stem	S. S. 304
9	Stud + Nut	ASTM A193 / B7-2H
10	Stem Packing	Wire Braided Graphite
11	Gland Nut	S. S. 304
12	Travel Indicator	S. S. 302
13	Connecting Nut	S. S. 304
14	T. S. Plug	S. S. 304
15	Teflon	CFT
16	Stem Seal	Viton

Dimensions : (All Dimensions are in mm)

Valve Model	Size		H	L	P	D1	D2	D3	b	f	X	Z-B
	Inch	MM										
PKH - 15	1/2"	15	620	184	222	60.3	34.9	90	8	2	145	4-15.9
PKH - 20	3/4"	20	620	184	222	69.9	42.9	100	8.9	2	145	4-15.9
PKH - 25	1"	25	620	184	222	79.4	50.8	110	9.6	2	145	4-15.9
PKH - 32	1.1/4"	32	620	200	222	88.9	63.5	115	11.2	2	160	4-15.9
PKH - 40	1.1/2"	40	620	222	222	98.4	73	125	12.7	2	160	4-15.9
PKH - 50	2"	50	660	254	222	120.7	92.1	150	14.3	2	180	4-19.05
PKH - 65	2.1/2"	65	800	276	296	139.7	104.8	180	15.9	2	205	4-19.05
PKH - 80	3"	80	800	298	296	152.4	127	190	17.5	2	205	4-19.05
PKH - 100	4"	100	840	352	296	190.5	157.2	230	22.3	2	240	8-19.05
PKH - 150	6"	150	990	451	296	241.3	215.9	280	23.9	2	320	8-22.2

Note : Since, constant worldwide advancement in technology, We keep our rights reserved to make changes time to time in Technical specifications and Dimensions without prior notice.

Pub. on: January, 2015 (Rev.-01)

2/2 - 3/2 Way Pneumatic Diaphragm Operated

Thermic Fluid Control Valve Upto 450 °C

aira
VALVE AUTOMATION
ISO 9001 CO.

"aira"

offers 3/2 - 2/2 way pneumatic diaphragm operated precise Regulating design on/off valve for thermic fluid & High Temperature Application

Size Range : 1/2" to 12" Flanged End

Valve Specification	
Trim Design	Contoured parabolic / Cage Guided / Pressure Balanced
Characteristic	Liner / Equal Percentage / ON - OFF (Quick Opening)
End Connection	Flanged end ASME B 16.5 CL 150 (300 / 600 Available On Request)
Pressure Rating	ASME B 16.5 CL 150 / 300 / 600
Temperature	Upto 450 °C Max.
Leakage	ASME B16.104 CL IV for Metal to Metal Seating

Salint Feature :

- Precise Regulation with High flow capacity
- Large type of trim Top Operating designs for various duty conditions
- In line Repairable Design for easy maintenance
- Tight closure even in extreme operating conditions
- Multi action type Actuator (Direct / Reverse acting)
- Wide Range of actuators to meet different application

IBR APPROVED

High Pressure On Request.

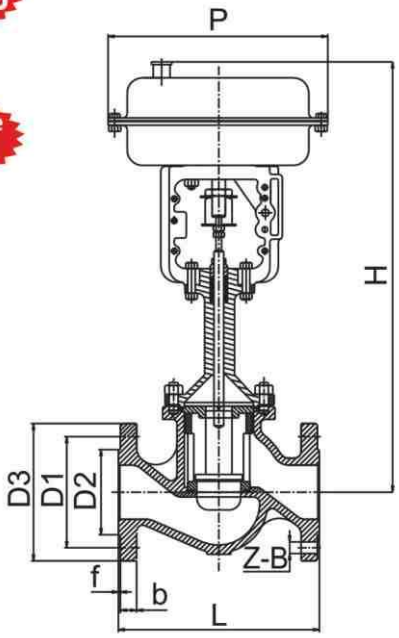

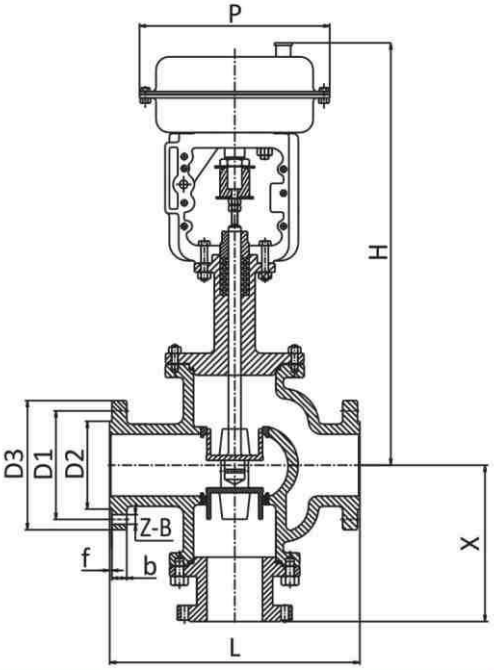

Accessories :

- 3/2 Way Solenoid Valve in all Standard Coil Voltage (Flame Proof Solenoid Coil - on request)]
- Pneumatic & Electro-Pneumatic valve positioner
- Manual Over - ride (Clutch Type)
- Limit Switch for On / Off Indication at Panel board
- Filter + Regulator Combination with Pressure Gauge
- Air Lock Valve

Dimensions : (All Dimensions are in mm)

Valve Model	Size		H	P	150#							300#							
	Inch	MM			L	D1	D2	D3	b	f	Z-B	L	D1	D2	D3	b	f	Z-B	X
CND - 15	1/2"	15	490	288	184	60.3	34.9	90	8	2	4-15.9	190	66.7	34.9	95	12.7	2	4-15.9	145
CND - 20	3/4"	20	495	288	184	69.9	42.9	100	8.9	2	4-15.9	194	82.6	42.9	115	14.3	2	4-19.05	145
CND - 25	1"	25	590	288	184	79.4	50.8	110	9.6	2	4-15.9	197	88.9	50.8	125	15.9	2	4-19.05	145
CND - 32	1.1/4"	32	595	288	200	88.9	63.5	115	11.2	2	4-15.9	235	98.4	63.5	135	17.5	2	4-19.05	160
CND - 40	1.1/2"	40	600	288	222	98.4	73	125	12.7	2	4-15.9	235	114.3	73	155	19.1	2	4-22.2	160
CND - 50	2"	50	605	288	254	120.7	92.1	150	14.3	2	4-19.05	267	127	92.1	165	20.7	2	8-19.05	180
CND - 65	2.1/2"	65	750	376	276	139.7	104.8	180	15.9	2	4-19.05	292	149.2	104.8	190	23.9	2	8-22.2	205
CND - 80	3"	80	790	376	298	152.4	127	190	17.5	2	4-19.05	317	168.3	127	210	27	2	8-22.2	205
CND - 100	4"	100	810	376	352	190.5	157.2	230	22.3	2	8-19.05	368	200	157.2	255	30.2	2	8-22.2	240
CND - 150	6"	150	990	475	451	241.3	215.9	280	23.9	2	8-22.2	473	269.9	215.9	320	35	2	12-22.2	320
CND - 200	8"	200	1050	594	543	298.5	269.9	345	27	2	8-22.2	568	330.2	269.9	380	39.7	2	12-25.4	385
CND - 250	10"	250	---	---	673	362	323.8	405	28.6	2	12-25.4	708	387.4	323.8	445	46.1	2	16-28.6	440
CND - 300	12"	300	---	---	737	431.8	381	485	30.2	2	12.25.4	775	450.8	381	520	49.3	2	16-31.75	On Req.

Note : Since, constant worldwide advancement in technology, We keep our rights reserved to make changes time to time in Technical specifications and Dimensions without prior notice.

Pub. on: January, 2015 (Rev.-01)

No.	2 Way DESCRIPTION	Material
1	Body	WCB / CF8 / CF8M
2	Bonnet	WCB / CF8 / CF8M
3	Cage	WCB / CF8 / CF8M
4	Seat Ring	S. S. 304
5	Plug	S. S. 304
6	Heat Transfer Fins	M. S.
7	Seat Gasket	S. S. 304 Spiral Wound
8	Body Gasket	S. S. 304 Spiral Wound
9	Stem	S. S. 304
10	Stud + Nut	ASTM A 193 / BH - 2H
11	Stem Packing	Wire Braided Graphite
12	Gland Nut	S. S. 304
13	Travel Indicator	S. S. 202
14	Connecting Nut	S. S. 304

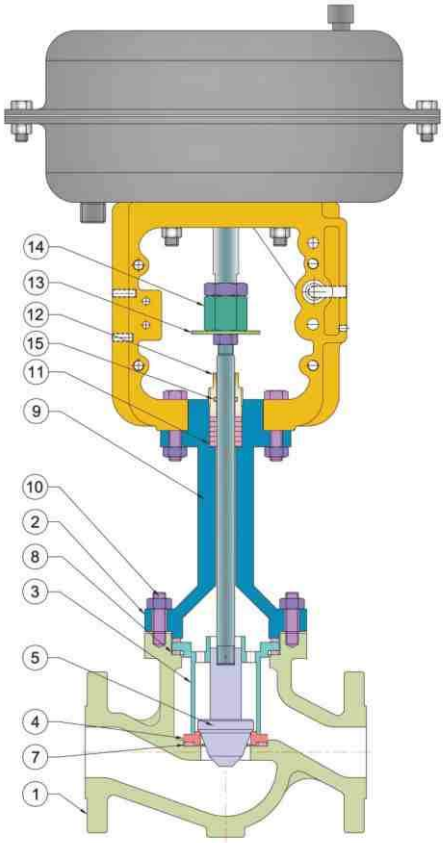

No.	3 Way DESCRIPTION	Material
1	Body	WCB / CF8 / CF8M
2	Bonnet	WCB / CF8 / CF8M
3	Tail Piece	WCB / CF8 / CF8M
4	Seat Ring	S. S. 304
5	Plug	S. S. 304
6	Seat Gasket	S. S. 304 Spiral Wound
7	Body Gasket	S. S. 304 Spiral Wound
8	Stem	S. S. 304
9	Stud + Nut	ASTM A 193 / B7 - 2H
10	Stem Packing	Wire Braided Graphite
11	Gland Nut	S. S. 304
12	Travel Indicator	S. S. 202
13	Heat Transfer Fins	M. S.
14	Connecting Nut	S. S. 304

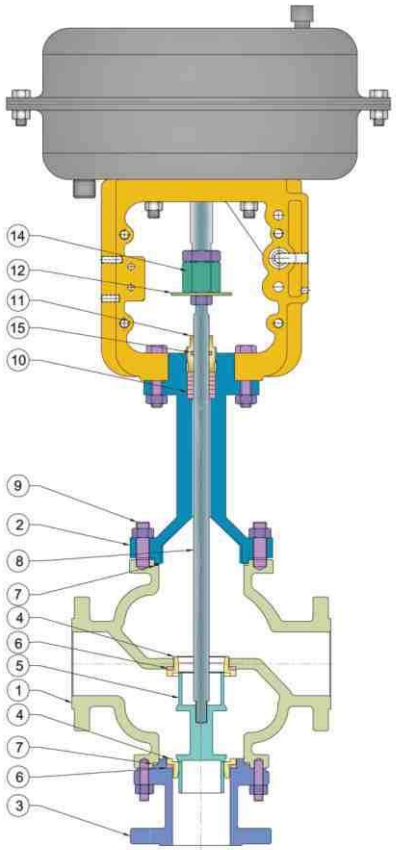

Pub. on: January, 2015 (Rev.-01)

2/2 - 3/2 Way Pneumatic Diaphragm Operated

Low Temperature Control Valve Upto 220 °C

VALVE AUTOMATION ISO 9001 CO.

"aira"

offers 3/2 - 2/2 way pneumatic diaphragm operated precise Regulating design on/off valve for thermic fluid & Low Temperature Application

Size Range : 1/2" to 12" Flanged End

Valve Specification	
Trim Design	Contoured Paraboicl / Cage Guided / Pressure Balanced
Characteristic	Liner / Equal Percentage / ON - OFF (Quick Opening)
End Connection	Flanged end ASME B 16.5 CL 150 (300 / 600 Available On Request)
Pressure Rating	ASME B 16.5 CL 150 / 300 / 600
Temperature	Upto 450 °C Max.
Leakage	ASME B16.104 V to VI

IBR APPROVED

High Pressure On Request.

Salient Feature :

- Precise Regulation with High flow capacity
- Large type of trim Top Operating designs for various duty conditions
- In line Repairable Design for easy maintenance
- Tight closure even in extreme operating conditions
- Multi action type Actuator (Direct / Reverse acting)
- Wide Range of actuators to meet different application

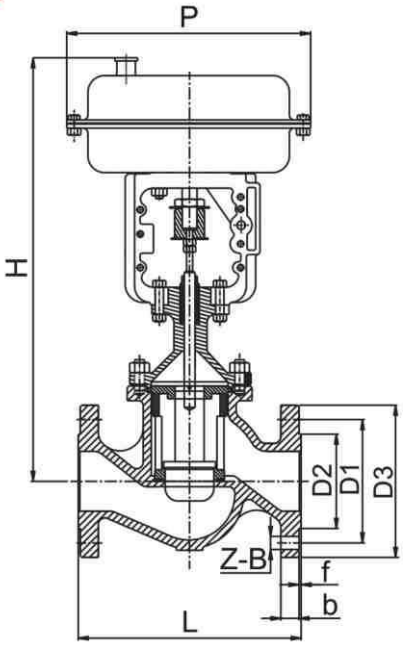

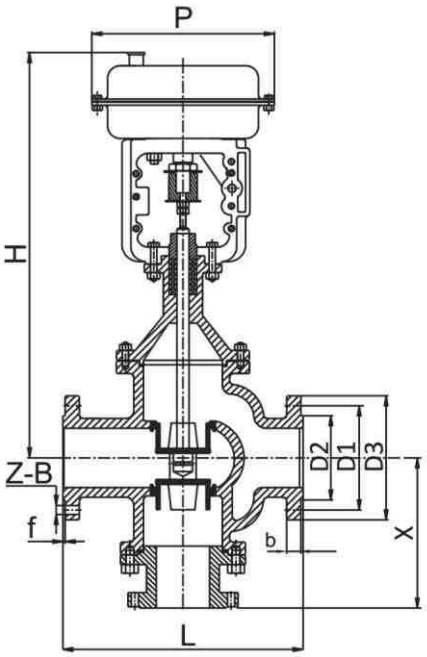

Accessories :

- 3/2 Way Solenoid Valve in all Standard Coil Voltage (Flame Proof Solenoid Coil - on request)]
- Pneumatic & Electro-Pneumatic valve positioner
- Manual Over - ride (Clutch Type)
- Limit Switch for On / Off Indication at Panel board
- Filter + Regulator Combination with Pressure Gauge
- Air Lock Valve

Dimensions : (All Dimensions are in mm)

Valve Model	Size		H	P	150#							300#							
	Inch	MM			L	D1	D2	D3	b	f	Z-B	L	D1	D2	D3	b	f	Z-B	X
CKD - 15	1/2"	15	425	288	184	60.3	34.9	90	8	2	4-15.9	190	66.7	34.9	95	12.7	2	4-15.9	145
CKD - 20	3/4"	20	430	288	184	69.9	42.9	100	8.9	2	4-15.9	194	82.6	42.9	115	14.3	2	4-19.05	145
CKD - 25	1"	25	455	288	184	79.4	50.8	110	9.6	2	4-15.9	197	88.9	50.8	125	15.9	2	4-19.05	145
CKD - 32	1.1/4"	32	460	288	200	88.9	63.5	115	11.2	2	4-15.9	235	98.4	63.5	135	17.5	2	4-19.05	160
CKD - 40	1.1/2"	40	470	288	222	98.4	73	125	12.7	2	4-15.9	235	114.3	73	155	19.1	2	4-22.2	160
CKD - 50	2"	50	485	288	254	120.7	92.1	150	14.3	2	4-19.05	267	127	92.1	165	20.7	2	8-19.05	180
CKD - 65	2.1/2"	65	620	376	276	139.7	104.8	180	15.9	2	4-19.05	292	149.2	104.8	190	23.9	2	8-22.2	205
CKD - 80	3"	80	630	376	298	152.4	127	190	17.5	2	4-19.05	317	168.3	127	210	27	2	8-22.2	205
CKD - 100	4"	100	700	376	352	190.5	157.2	230	22.3	2	8-19.05	368	200	157.2	255	30.2	2	8-22.2	240
CKD - 150	6"	150	815	475	451	241.3	215.9	280	23.9	2	8-22.2	473	269.9	215.9	320	35	2	12-22.2	320
CKD - 200	8"	200	875	594	543	298.5	269.9	345	27	2	8-22.2	568	330.2	269.9	380	39.7	2	12-25.4	385
CKD - 250	10"	250	---	---	673	362	323.8	405	28.6	2	12-25.4	708	387.4	323.8	445	46.1	2	16-28.6	440
CKD - 300	12"	300	---	---	737	431.8	381	485	30.2	2	12.25.4	775	450.8	381	520	49.3	2	16-31.75	On Req.

Note : Since, constant worldwide advancement in technology, We keep our rights reserved to make changes time to time in Technical specifications and Dimensions without prior notice.

Pub. on: January, 2015 (Rev.-01)

No.	2 Way DESCRIPTION	Material
1	Body	WCB / CF8 / CF8M
2	Bonnet	WCB / CF8 / CF8M
3	Cage	WCB / CF8 / CF8M
4	Seat Ring	S. S. 304
5	T. S. Guide	S. S. 304
6	T. S. Plug	S. S. 304
7	Teflon	CFT
8	Seat Gasket	S. S. 304 Spiral Wound
9	Body Gasket	S. S. 304 Spiral Wound
10	Stem	S. S. 304
11	Stud + Nut	ASTM A 193 / B7 - 2H
12	Stem Packing	Wire Braided Graphite
13	Gland Nut	S. S. 304
14	Travel Indicator	S. S. 202
15	Connecting Nut	S. S. 304

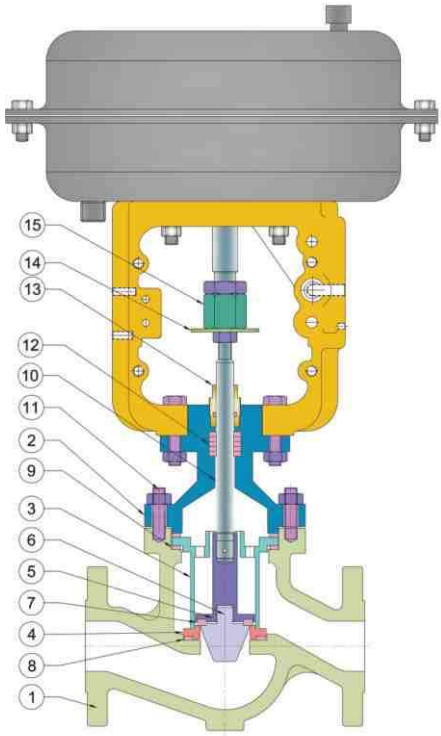

No.	3 Way DESCRIPTION	Material
1	Body	WCB / CF8 / CF8M
2	Bonnet	WCB / CF8 / CF8M
3	Tail Piece	WCB / CF8 / CF8M
4	Seat Ring	S. S. 304
5	Plug	S. S. 304
6	Seat Gasket	S. S. 304 Spiral Wound
7	Body Gasket	S. S. 304 Spiral Wound
8	Stem	S. S. 304
9	Stud + Nut	ASTM A 193 / B7 - 2H
10	Stem Packing	Wire Braided Graphite
11	Gland Nut	S. S. 304
12	Travel Indicator	S. S. 202
13	Connecting Nut	S. S. 304
14	T. S. Guide	CF8
15	Seat	CFT / PTFE

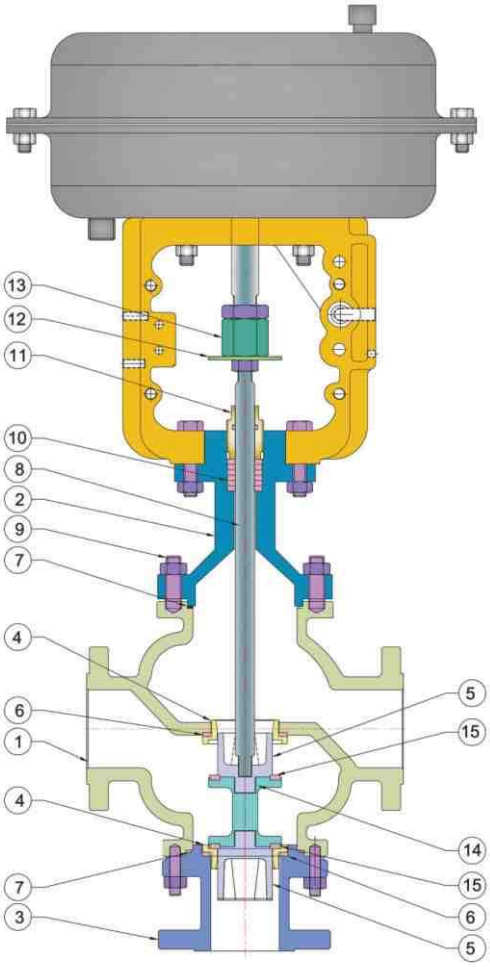

Note : Since, constant worldwide advancement in technology, We keep our rights reserved to make changes time to time in Technical specifications and Dimensions without prior notice.

Pub. on: January, 2015 (Rev.-01)

Pneumatic Diaphragm Actuator

aira
VALVE AUTOMATION
ISO 9001 CO.

Actuator Specification	
Inlet Air Supply	2.5 to 4 Kg/cm^2
Stem Movement	Linear
Actuator Action	Air to Open / Air to Close
Air Fail Position	Closed / Open

Type		Diaphragm Area	Spring	Maximum Stroke (mm)	Air Pressure (Bar)	Max Thrust (N)	Volume (Ltrs / Stroke)
DA - CND - 02	Direct	377	4 ~ 8	24 - 30	2.4 ~ 4	5200	1.77
	Reverse				0	920	
DA - CND - 03	Direct	664	3 ~ 6	38 - 45	2.4 ~ 4	7800	4.18
	Reverse				0	720	
DA - CND - 04	Direct	1039	4 ~ 8	55 - 65	2.4 ~ 4	11000	8.93
	Reverse				0	3840	
DA - CND - 05	Direct	On Request	1	65 - 90	2.4 ~ 4	On Request	On Request
	Reverse				0		
DA - CND - 06	Direct	1921	3 ~ 6	100 - 120	2.4 ~ 4	15000	27.07
	Reverse				0	5000	

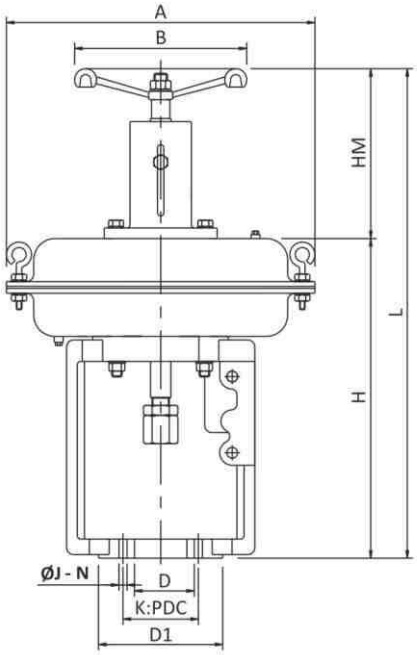

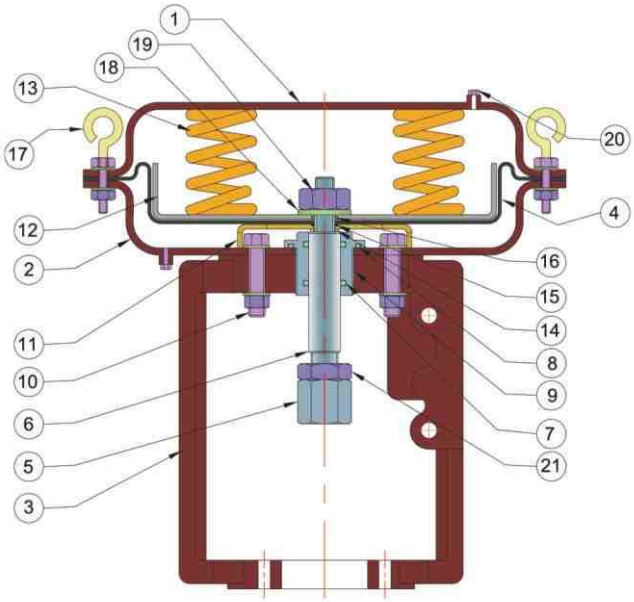

No.	DESCRIPTION	Material
1	Top Cover	M. S.
2	Bottom Cover	M. S.
3	Yoke	S. G. Iron
4	Diaphragm	Nitrile Rubber
5	Connecting Nut	S. S. 304
6	Stem	S. S. 304
7	Stem Seal	Viton
8	Seal For Bearing Bush	Viton
9	Bearing Bush	Aluminium
10	Bolt, Nut For Yoke	M. S.
11	Pressure Plate	M. S.
12	Spring Plate	M. S.
13	Spring	Spring Steel
14	'O' - Ring	Viton
15	'O' - Ring	Viton
16	'O' - Ring	Viton
17	Lifting Hook Nut, Washer	M. S.
18	Spring Washer	S. S.
19	Stem Lock Nut	S. S.
20	Exhaust	Plastic
21	Check Nut	S. S. 304

Technical Peremeter of Actuators

Valve Model	Size								Valve Size
	D	D1	ØJ - N	K:PCD	H	HM	A	B	
DA - CND - 02	60	105	9 - 4	80	300	----	288	----	DN15 - DN50
DA - CND - 03	80	135	12 - 4	105	415	----	376	----	DN65 - DN100
DA - CND - 04	95	158	12 - 4	120	510	----	475	----	DN125 - DN150
DA - CND - 05	90	177	14 - 4	140	850	----	620	----	DN200 - DN300
DA - CND - 06	100	197	14 - 8	140	710	----	594	----	DN200 - DN300
MO-DA - CND - 02	60	105	9 - 4	80	----	230	288	300	DN15 - DN50
MO-DA - CND - 03	80	135	12 - 4	105	----	270	376	300	DN65 - DN100
MO-DA - CND - 04	95	158	12 - 4	120	----	310	475	400	DN125 - DN150
MO-DA - CND - 06	100	197	14 - 8	140	----	310	594	595	DN200 - DN300

Note : Since, constant worldwide advancement in technology, We keep our rights reserved to make changes time to time in Technical specifications and Dimensions without prior notice.

Pub. on: January, 2015 (Rev.-01)

aira®

VALVE AUTOMATION
ISO 9001 CO.

SERIES : E
Solenoid Valve

2/2 & 3/2 Way Solenoid Valves
High Pressure & High Temperature also available
Screwed / Flanged / T. C. End also available
Voltages : 12V, 24V, 48V, 110V, 230V, AC / DC
Coil Type : General / IP 65 & 67 / IS 2147
Flamproof / Weather Proof Terminal Junction Box
Intriasically Safe Coil

ISO 9001 : 2008 BUREAU VERITAS Certification UKAS

609 - 0055

IS / IEC 60079-1 CM/L-3812155

CIMFR

CE IBR

2/2 Way Pilot Operated

Diaphragm Type Solenoid Valve

Catalogue No.
APL / 1021

aira
VALVE AUTOMATION
ISO 9001 CO.

"aira"

offers HIGH FLOW Diaphragm type solenoid valves, are specially engineered in the construction of Investment Cast CF8 / CF8M body with Electro Polished for multiple and long lasting operations. valves for the inflamable media / environment / Flamproof / Explosion Proof solenoid coil are available in such application.

Types : 1. Normally close - Engergised to Open 2. Normally Open - Energised to Close

Application : Air, Water, Light Oil, Gas, Light Chemical

Size Range : 1/4" to 6" Screwed / Flanged / Triclover End

Technical Specifications :	
Pressure	0.5 to 10 Bar
Temperature	-5 °C to 85 °C (Upto 120 °C On Request)
Coil Voltage	12V, 24V, 48V, 110V, 230V, AC/DC
Coil Insulation	"F" Class
Coil Rating	Continuous Rated
Ends	S/E, F/E 150# / TC End

Applications

Textile Processing Machinery, Chemical Plants, Water Treatment, Sugar Machinery, Cement Machinery, Pumps, Irrigation, Combustion Equipment, Heat Exchanger, Air Dryer, Pollution Controls, Landry Equipments and where dependable ON/OFF type control is required.

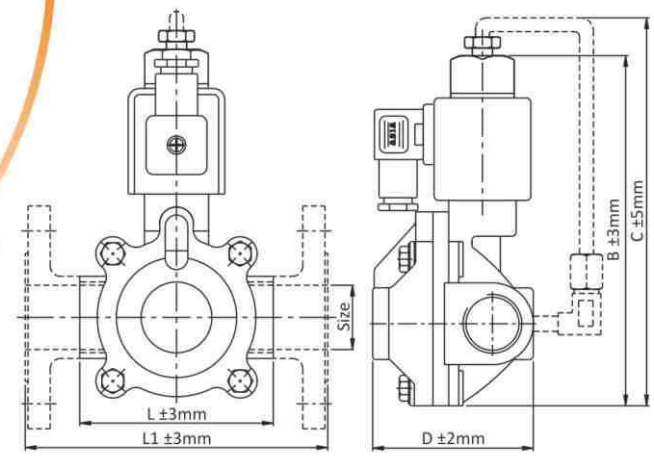

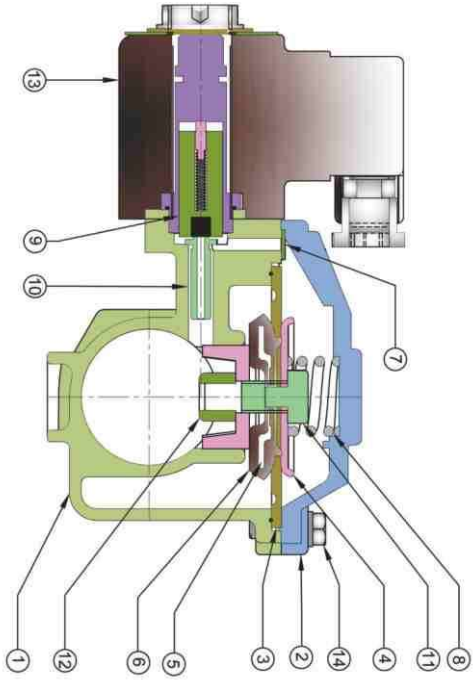

Dimensions : (All Dimensions are in mm)

Valve Model	Valve Size MM	Valve Size Inch	Flow Factor Kvm³/hr	L S / E	L1 F / E	B	C	D	Orifice MM	Weight (Approx.) S / E	Weight (Approx.) F / E
ISD - 6	6	1/4"	2.5	66	130	128.5	170	55.5	16	0.800	1.200
ISD - 10	10	3/8"	2.5	66	130	128.5	170	55.5	16	0.800	1.200
ISD - 15	15	1/2"	3.5	66	130	128.5	170	55.5	16	0.800	1.200
ISD - 20	20	3/4"	5.0	80	150	136	175.5	65	19	1.100	1.600
ISD - 25	25	1"	11.0	95	160	153	195	81	24	1.400	2.150
ISD - 32	32	1.1/4"	13.0	119	180	163.50	207	98	34.50	2.000	3.300
ISD - 40	40	1.1/2"	20.0	119	200	163.50	207	98	34.50	2.000	3.300
ISD - 50	50	2"	38.0	137	230	184.5	229	116	45	2.900	5.000
ISD - 65	65	2.1/2"	67.6	172	290	201	---	142.5	65	4.200	7.500
ISD - 80	80	3"	97.6	195	310	237.5	---	158	72	5.900	10.050
ISD - 100	100	4"	-	300	350	284.5	---	206	98	13.950	18.850
ISD - 150	150	6"	ON REQUEST								

No.	Description	Material	Qty.
01	Body	CF8 / CF8M	01
02	Cover	CF8 / CF8M	01
03	Diaphragm	NBR	01
04	Embossed Washer	S.S.304	01
05	Seat Washer	S. S.	01
06	Diaphragm Seat	NBR	01
07	'O' Ring For Cover	NBR	01
08	Spring	S.S.304	01
09	Housing Plunger Set	STD.	01
10	Pilot Seat	Brass	01
11	Hex Pin for Diaphragm	S.S.	01
12	Hex Nut for Diaphragm	S.S.	01
13	Sole. Coil Casing	STD.	01
14	Hex Bolt + Washer	S.S.	06

Solenoid Coil

A

(for General)

B

IP - 65 & IS:2147
(for Weather Proof)

C

Explosion & Flame Proof Coil [As per IS / IEC 60079-1 standard approved by Central Institute of Mining and Fuel Research (CIMFR)]

Note : Since, constant worldwide advancement in technology, We keep our rights reserved to make changes time to time in Technical specifications and Dimensions without prior notice.

Pub. on: January, 2015 (Rev.-01)

2/2 Way Pilot Operated

Piston Type High Pressure (110 Kg/cm^2) Solenoid Valve

Catalogue No.
APL / 1029-B

aira
VALVE AUTOMATION
ISO 9001 CO.

"aira"

offers HIGH FLOW piston type solenoid valves. are specially engineered in the construction of Investment Cast CF8 / CF8M body for multiple and long lasting operations, especially for HIGH PRESSURE FLUIDS

Size Range : 1/4" to 2" Screwed / Flanged Triclover End

solenoid valves are the best for the inflammable media. The Flameproof Explosion proof solenoid coils are available in such application.

Pressure upto 110 bar

Technical Specifications :	
Pressure	2 To 110 Bar
Temperature	-5 °C to 85 °C (Upto 120 °C On Request)
Coil Voltage	12V, 24V, 48V, 110V, 230V, AC/DC
Coil Insulation	"H" Class
Coil Encloser Meets	IP 67 (Flame Proof / Explosion Proof as Per IS IEC 60079-1 STD for Class II A, II B, II C Zone
Coil Rating	Continuous Rated
Ends	S/E, F/E 150# / TC End
Media	Hot Water / LD Oil / Air / Water / Corrosive Media

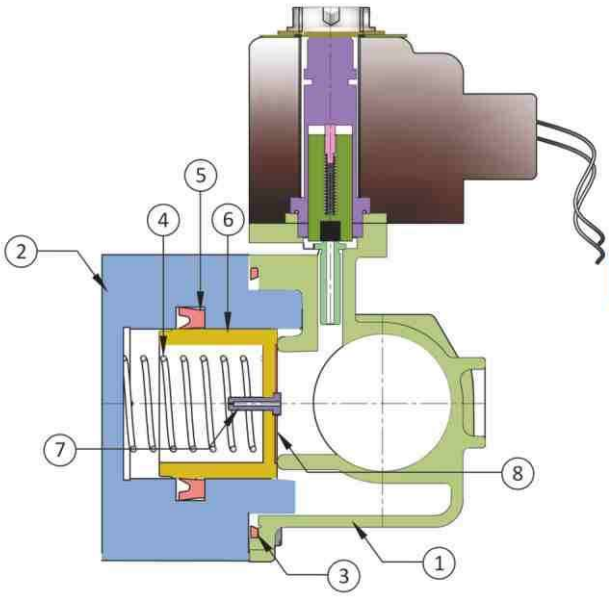

No.	Description	Material	Qty.
01	Body	CF8 / CF8M	01
02	Cover	S.S.304 / S.S.316	01
03	Body Seat	PTFE	01
04	Spring	S.S.304	01
05	V-Seal	VITON	01
06	Piston	S.S.304 / S.S.316	01
07	Piston Bolt	BRASS	01
08	Piston Washer	PEEK	01

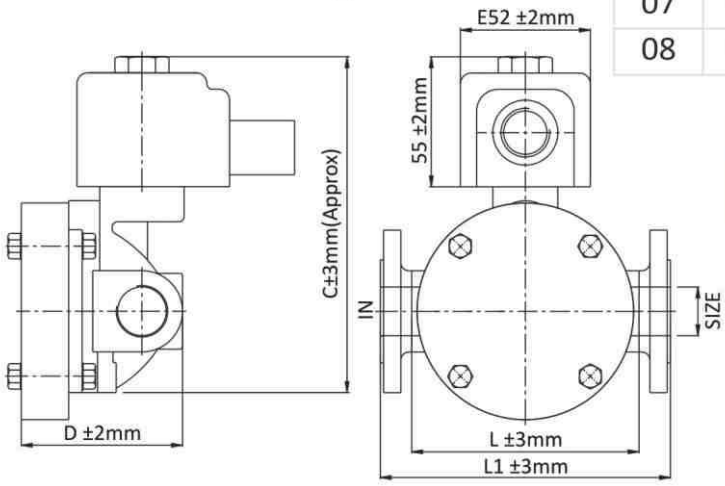

Dimensions : (All dimensions are in MM)

Valve Model	Valve Size		L	L1	C	D	Weight(Approx)	
	Inch	MM	Screwed	Flanged	(Approx.)		S/E	F/E
HPQX - 6	1/4"	6	65.50	130	139.50	69	-	-
HPQX - 10	3/8"	10	65.50	130	139.50	69	-	-
HPQX - 15	1/2"	15	65.50	130	139.50	69	2.042	-
HPQX - 20	3/4"	20	80	150	147	80	2.665	-
HPQX - 25	1"	25	95	160	163	96	3.665	-
HPQX - 32	1.1/4"	32	119	180	176	127	6.000	-
HPQX - 40	1.1/2"	40	119	200	176	127	5.895	-
HPQX - 50	2"	50	137	230	195	145	9.810	-

Note : Since, constant worldwide advancement in technology, We keep our rights reserved to make changes time to time in Technical specifications and Dimensions without prior notice.

Pub. on: January, 2015 (Rev.-01)

2/2 Way Pilot Operated

Piston Type High Pressure Solenoid Valve

Catalogue No.
APL / 1029-A

aira
VALVE AUTOMATION
ISO 9001 CO.

"aira"

offers HIGH FLOW piston type solenoid valves, are specially engineered in the construction of Investment Cast CF8 / CF8M body for multiple and long lasting operations, especially for HIGH PRESSURE FLUIDS valves for the inflamable media / environment / Flamproof / Explosion Proof solenoid coil are available in such application.

Pressure upto 40 bar

Size Range : 1/4" to 2" Screwed / Flanged / Triclover End

Technical Specifications :	
Pressure	2 to 40 Bar
Temperature	90 °C
Coil Voltage	12V, 24V, 48V, 110V, 230V, AC/DC
Coil Insulation	H Class Suitable Upto 140 °C
Coil Encloser	IP 67 (Flame Proof / Explosion Proof as Per IS IEC 60079-1 STD for Class II A, II B, II C Zone
Coil Rating	Continuous Rated
Ends	S/E, F/E 150# / TC End
Media	Hot Water / LD Oil / Air / Water / Corrosive Media

Technical Specification Table

Size Inch	Orifice mm	Flow factor kv M³/hr.	Min. Press. bar	Maximum operating pressure (Bar)					
				AC			DC		
				Air/ Gas	Water	Light Oil	Air/ Gas	Water	Light Oil
1/4"	16	1.8	2	28	26	24	28	26	24
3/8'	16	2.6	2	28	26	24	28	26	24
1/2"	16	3.4	2	28	26	24	28	26	24
3/4"	18.50	5.2	2	32	28	24	32	28	24
1"	24	8.5	2	34	28	17	34	28	17
1.1/4"	34	14.0	2	34	25	17	34	25	17
1.1/2"	34	17.3	2	34	25	22	34	25	22
2"	45	30.5	2	30	25	22	30	25	22

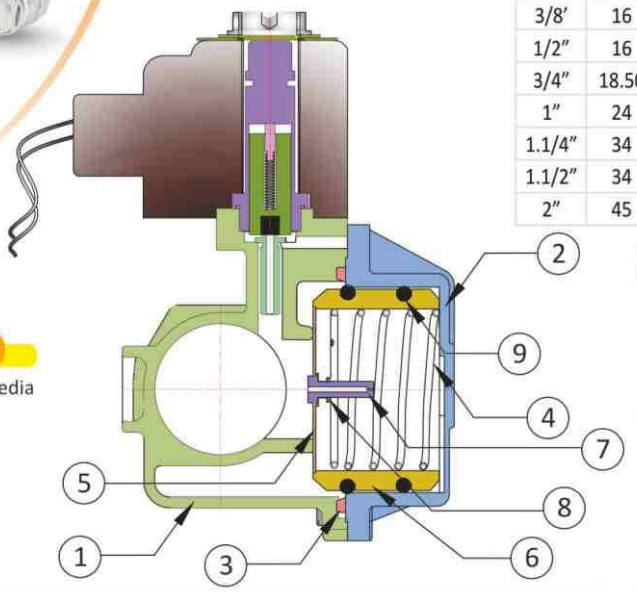

No.	Description	Material	Qty.
01	Body	CF8 / CF8M	01
02	Cover	CF8 / CF8M	01
03	Body Ring	PTFE	01
04	Spring	S.S. 304	01
05	Piston Washer	PTFE	01
06	Piston	CF8 / CF8M	01
07	Piston Bolt	S.S.304	01
08	O-Ring	Viton	01
09	Piston Ring	C.F.T.	02

Caution :

- Do not use in steam media
- Max. Temp. 95 °C for Hot Water
- Avoid Back Pressure
- INSTALLATION OF "FILTER" IN INLET SIDE IS HIGHLY RECOMMENDED

Dimensions : (All Dimensions are in mm)

Valve Model	Valve Size		L Screwed	L1 Flanged	C (Approx)	D	Weight (App.) Kgs.	
	MM	Inch					S/E	F/E
HPSE - 6	6	1/4"	66	130	139.50	68	-	-
HPSE - 10	10	3/8"	66	130	139.50	68	-	-
HPSE - 15	15	1/2"	66	130	139.50	68	1.250	1.650
HPSE - 20	20	3/4"	80	150	148	80	1.600	2.100
HPSE - 25	25	1"	95	160	163	95.5	2.050	2.800
HPSE - 32	32	1.1/4"	119	180	176	114	2.900	4.200
HPSE - 40	40	1.1/2"	119	200	176	114	2.900	4.200
HPSE - 50	50	2"	137	230	195	131.5	4.050	6.150

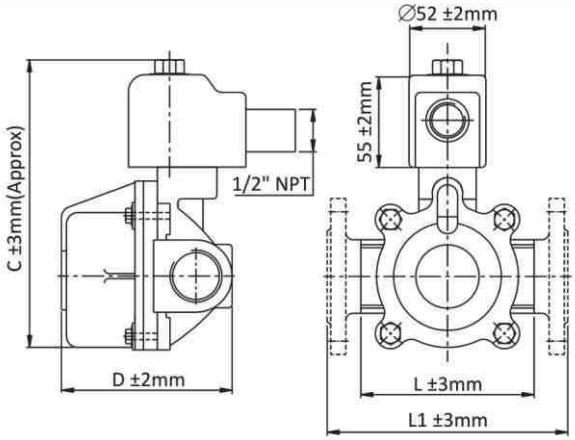

Note : Since, constant worldwide advancement in technology, We keep our rights reserved to make changes time to time in Technical specifications and Dimensions without prior notice.

Pub. on: January, 2015 (Rev.-01)

2/2 Way Pilot Operated Piston Type

Steam & High Temperature Solenoid Valve

Catalogue No.
APL / 1022

aira
VALVE AUTOMATION
ISO 9001 CO.

"aira"

offers HIGH FLOW piston type solenoid valves, are specially engineered in the construction of Investment Cast CF8 / CF8M / CF3M body for multiple and long lasting operations, especially in STEAM & HIGH Temperature FLUIDS. valves for the inflamable media / environment / Flamproof / Explosion Proof solenoid coil are available in such application.

Size Range : 1/4" to 4" Screwed / Flanged / Triclover End

Technical Specifications :

Pressure	8 PSI to 180 PSI
Temperature	Upto 180 °C
Coil Voltage	12V, 24V, 48V, 110V, 230V, AC/DC
Coil Insulation	"H" Class Suitable Upto 180 °C
Coil Encloser Meets	IP 67 (Flame Proof / Explosion Proof as Per IS IEC 60079-1 STD for Class II A, II B, II C Zone
Coil Rating	Continuous Rated
Ends	S/E, F/E 150# / TC End
Media	Hot Water / Steam / High Temperature Fluids

Caution :

- Suitable for Dry Steam
- Hot water temperature limited up to 95 °C only
- Avoid Back Pressure
- INSTALLATION OF "FILTER" IN INLET SIDE IS HIGHLY RECOMMENDED

Technical Specification Table

Size Inch	Orifice mm	Flow Factor kvm³/hr.	Minimum Pressure Bar	Maximum operating pressure (Bar)	
				Hot Water	Steam
1/4"	10	2.8	1	9	9
3/8'	16	3.4	1	9	9
1/2"	16	4	1	9	9
3/4"	18.5	7	1	9	9
1"	24	12	1	9	9
1.1/4"	34	15	1	9	9
1.1/2"	34	23	1	9	9
2"	45	38	1	9	9

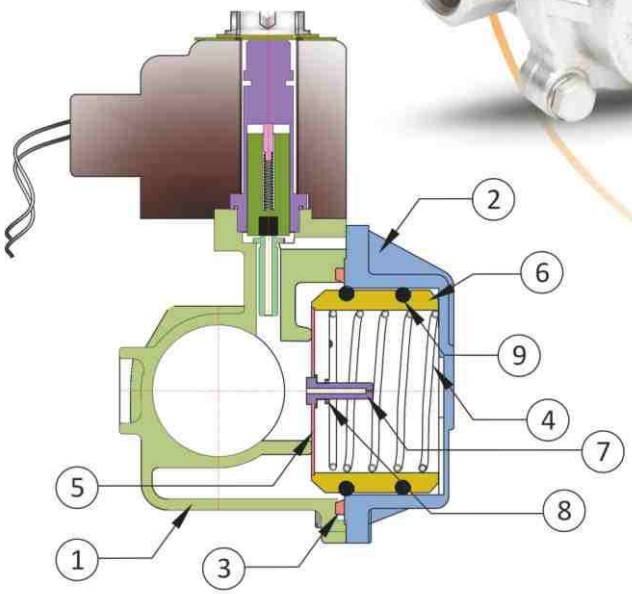

No.	Description	Material	Qty.
01	Body	CF8 / CF8M	01
02	Cover	CF8 / CF8M	01
03	Body Ring	PTFE	01
04	Spring	S.S. 304	01
05	Piston Washer	PTFE	01
06	Piston	CF8 / CF8M	01
07	Piston Bolt	S.S.304	01
08	O-Ring	Viton	01
09	Piston Ring	C.F.T.	02

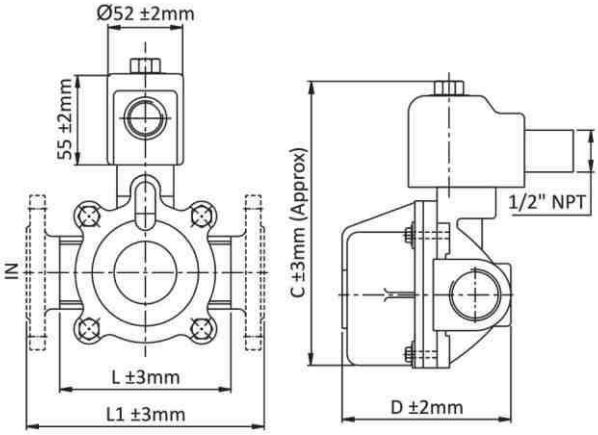

Dimensions : (All Dimensions are in mm)

Valve Model	Valve Size		L Screwed	L1 Flanged	C (Approx)	D	Weight (App.) Kgs.	
	MM	Inch					S/E	F/E
HVS - 6	6	1/4"	66	130	139.5	68	1.450	1.750
HVS - 10	10	3/8"	66	130	139.5	68	1.400	1.700
HVS - 15	15	1/2"	66	130	139.5	68	1.300	1.650
HVS - 20	20	3/4"	80	150	148	80	1.600	2.100
HVS - 25	25	1"	95	160	163	95.5	2.100	2.850
HVS - 32	32	1.1/4"	119	180	176	114	2.850	4.150
HVS - 40	40	1.1/2"	119	200	176	114	2.850	4.150
HVS - 50	50	2"	137	230	195	131.5	4.150	6.250
HVS - 65	65	2.1/2"	172	290	213.5	153	5.700	9.000
HVS - 80	80	3"	---	310	---	---	---	---
HVS - 100	100	4"	---	350	---	---	---	---

Note : Since, constant worldwide advancement in technology, We keep our rights reserved to make changes time to time in Technical specifications and Dimensions without prior notice.

Pub. on: January, 2015 (Rev.-01)

2/2 Way Semi Lift Diaphragm Operated

Low Pressure Solenoid Valve

Catalogue No.
APL / 1028

aira
VALVE AUTOMATION
ISO 9001 CO.

"aira"

offers 2/2 way semi Lift, high performance diaphragm type solenoid Valves, for high volume and low pressure application in air, gas, water, vacuum, light oil, corrosive fluids. available in normally close and normally open design.

Size Range : 3/8" to 4" Screwed / Flanged / Triclover End

Technical Specifications :

Pressure Rating	0 to 5 Bar Max. (0 to 6 Bar On Request)
Temperature of Fluid	85 °C Max. (High Temperature On Request)
Coil Voltage	12V, 24V, 48V, 110V, 230V, AC/DC
Coil Insulation	"F" & "H" Class Suitable Upto 140 °C
Coil Encloser Meets	IP 67 (Flame Proof / Explosion Proof as Per IS IEC 60079-1 STD for Class II A, II B, II C Zone
Coil Ratings	Continuous Rated
Ends	S/E, F/E 150# / TC End

Suitable For

Autoclaves, Gas burning equipments, Oil centrifuge plants, Vacuum plants, Pump seal water application, Low pressure water circulation system, soler heating systems, Gas generator etc...

Technical Specification Table

Valve Model		Size Inch	Orifice mm	Flow factor kv M³/hr.	Minimum Pressure bar	Maximum operating pressure (Bar)					
						AC			DC		
Teflon Diaphragm	Rubber Diaphragm					Air/ Gas	Water	Light Oil	Air/ Gas	Water	Light Oil
GTD - 10	GSD - 10	3/8'	16	2.6	0	6	4.0	3.0	6	5.0	3.0
GTD - 15	GSD - 15	1/2"	16	3.4	0	6	4.0	3.0	6	5.0	3.0
GTD - 20	GSD - 20	3/4"	19.25	4.3	0	6	3.5	3.0	6	4.0	3.0
GTD - 25	GSD - 25	1"	25	10.3	0	6	3.5	2.0	6	4.0	2.5
GTD - 40	GSD - 40	1.1/2"	35	19.3	0	5	3	2.0	5	4.0	2.0
GTD - 50	GSD - 50	2"	45	32.5	0	4	3	2.0	4	3.0	2.0

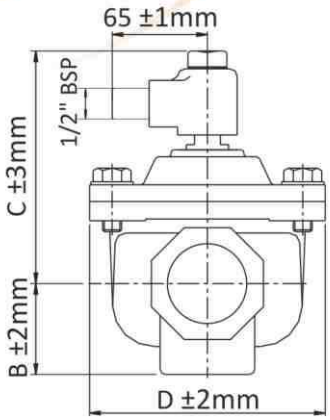

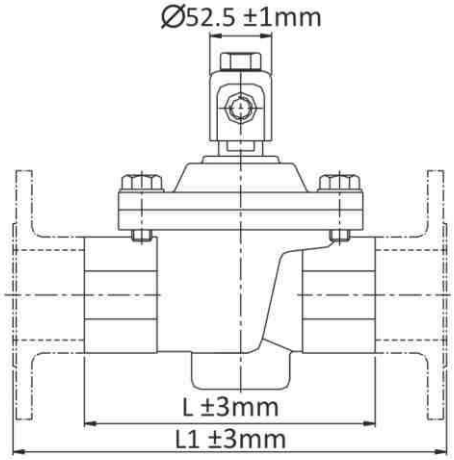

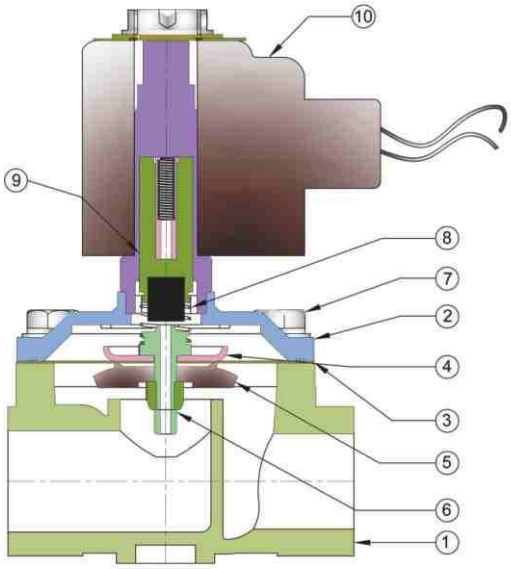

Dimensions : (All Dimensions are in mm)

Valve Model	Valve Size		L Screwed	L1 Flanged	B	C	D	Weight (App.) Kgs.	
	MM	Inch						S/E	F/E
GSD / GTD - 10	10	3/8"	66	130	16	112	57	1.050	1.500
GSD / GTD - 15	15	1/2"	66	130	16	112	57	1.000	1.400
GSD / GTD - 20	20	3/4"	80	150	21	113	67	1.200	1.700
GSD / GTD - 25	25	1"	97	160	29	121	82	1.500	2.250
GSD / GTD - 40	40	1.1/2"	118	200	35	132	99	2.050	3.350
GSD / GTD - 50	50	2"	137	230	43	146	120	3.100	5.200
GSD / GTD - 65	65	2.1/2"	172	290	57.5	166.5	145	6.100	9.400
GSD / GTD - 80	80	3"	195	310	----	----	----	----	----
GSD / GTD - 100	100	4"	300	350	79	195	215.5	----	----

No.	Description	Material	Qty.
01	Body	CF8 / CF8M	01
02	Cover	CF8 / CF8M	01
03	Diaphragm	NBR, PTFE	01
04	Embossed Washer	S.S. 304	01
05	Diaphragm Seat	NBR, PTFE	01
06	Pilot Pin + Nut	S.S. 304	01
07	Hex Bolt + Washer	S.S.	04
08	Taper Spring	S.S. 304	01
09	Housing Set	STD.	10
10	Sol. Coil Body	STD.	01

Note : Since, constant worldwide advancement in technology, We keep our rights reserved to make changes time to time in Technical specifications and Dimensions without prior notice.

Pub. on: January, 2015 (Rev.-01)

2/2 Way Semi Lift

Diaphragm Solenoid Valve

Catalogue No.
APL / 2021

aira
VALVE AUTOMATION
ISO 9001 CO.

"aira"

offers 2/2 way semi pilot, high performance diaphragm type solenoid Valves, for high volume and low pressure application in air, gas, water, vacuum, light oil, corrosive fluids. available in normally close and normally open design.

Size Range : 3/4" & 1" Screwed / Flanged

Technical Specifications :

Pressure Rating	0 to 5 Bar Max. (0 to 6 Bar On Request)
Temperature of Fluid	85 °C Max. (High Temperature On Request)
Coil Voltage	12V, 24V, 48V, 110V, 230V, AC/DC
Coil Insulation	"F" Class
Coil Encloser Meets	IP 67 (Flame Proof / Explosion Proof as Per IS IEC 60079-1 STD for Class II A, II B, II C Zone
Coil Ratings	Continuous Rated
Ends	S/E, F/E 150# / TC End

Suitable For

Autoclaves, Gas burning equipments, Oil centrifuge plants, Vacuum plants, Pump seal water application, Low pressure water circulation system, soler heating systems, Gas generator etc...

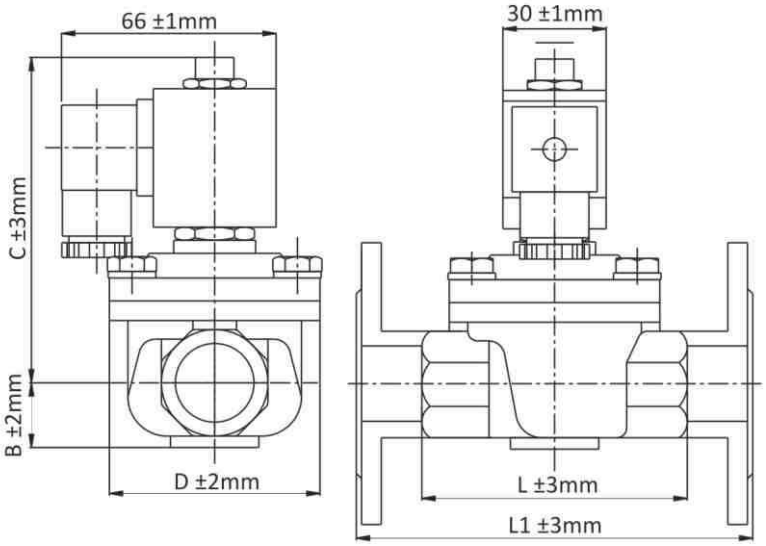

Dimensions : (All Dimensions are in mm)

Valve Model	Valve Size		L	L1	B	C	D	Weight (App.) Kgs.	
	MM	Inch	Screwed	Flanged				S/E	F/E
SGD - 20	20	3/4"	80	150	23	99.50	67	0.890	1.390
SGD - 25	25	1"	97	160	29	108.50	82	1.170	1.920

No.	Description	Material	Qty.
01	Body	CF8 / CF8M	01
02	Cover	CF8 / CF8M	01
03	Diaphragm	NBR	01
04	Embossed Washer	S. S. 304	01
05	Diaphragm Seat	NBR	01
06	Pilot Pin + Nut	S. S. 304	01
07	Hex Bolt + Washer	S. S.	01
08	Housing Set	STD.	01
09	Solenoid Coil	STD.	02

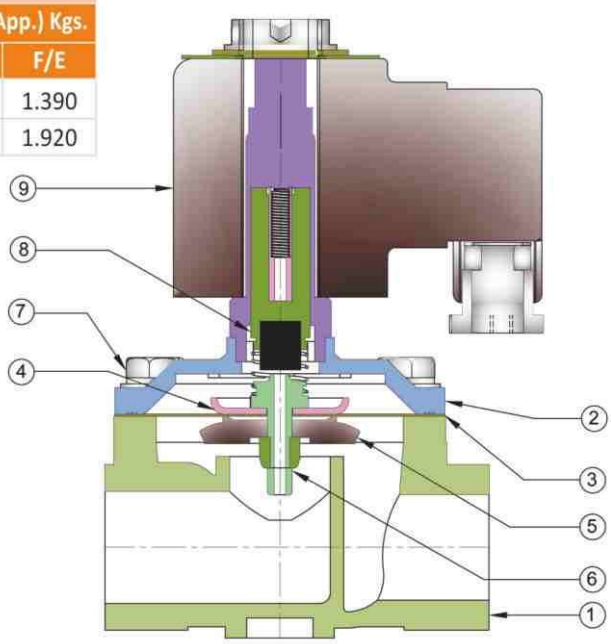

Note : Since, constant worldwide advancement in technology, We keep our rights reserved to make changes time to time in Technical specifications and Dimensions without prior notice.

Pub. on: January, 2015 (Rev.-01)

2/2 Way Direct Acting Solenoid Valve

Catalogue No.
APL / 1020

aira
VALVE AUTOMATION
ISO 9001 CO.

"aira"

solenoid valves are the best for the inflammable media. The Flame Proof Explosion proof solenoid coil are available in such application.

Size Range : 1/4", 3/8" & 1/2" BSP / NPT

Type : Normally Close (N / C) / Normally Open (N / O)

- Compact design light weight & long durability.
- Constructed from advanced technology & design.
- Easy installation, universal mounting.

GROUP- I
Suitable for
0 to 10 Kg/Cm²

GROUP- II
Suitable for
2, 10, 35 & 70 Kg/ Cm²

Technical Specification	
Temperature of fluied	-5 °C to 85 °C (High Temperature On Request)
Coil Voltage	12V, 24V, 48V, 110V, 230V AC / DC
Media	Air / Gas/ Oil / Water / Chemical

Technical Specification Table

Group	Model	Type	Size	Position	Orifice	Pressure
Group - I	BSD - I	2/2 Way	1/4",1/2"	N/C	2.5mm	10Kg
Group - I	SBD - I	2/2 Way	1/4"	N/C	2.5mm	10Kg
Group - I	BUD - I	3/2 Way	1/4",1/2"	N/C	1.2mm	10Kg
Group - I	UBD - I	3/2 Way	1/4"	N/C	1.2mm	7Kg
Group - II	BBC - II	2/2 Way	1/4",3/8",1/2"	N/C	4mm	10Kg
Group - II	BBC - II	2/2 Way	1/4",3/8",1/2"	N/C	2.2mm	35Kg
Group - II	BBC - II	2/2 Way	1/4",3/8",1/2"	N/C	1.2mm	70Kg
Group - II	BBC - II	2/2 Way	1/2"	N/C	1.5mm	2Kg
Group - II	BBS - II	3/2 Way	1/4",3/8",1/2"	N/C	4mm	10Kg
Group - II	BBS - II	3/2 Way	1/4",3/8",1/2"	N/C	2.2mm	35Kg
Group - II	BBS - II	3/2 Way	1/4",3/8",1/2"	N/C	1.2mm	70Kg

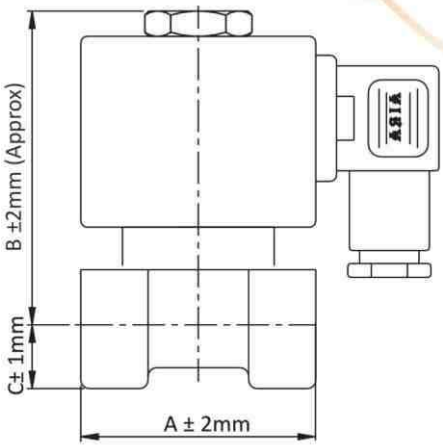

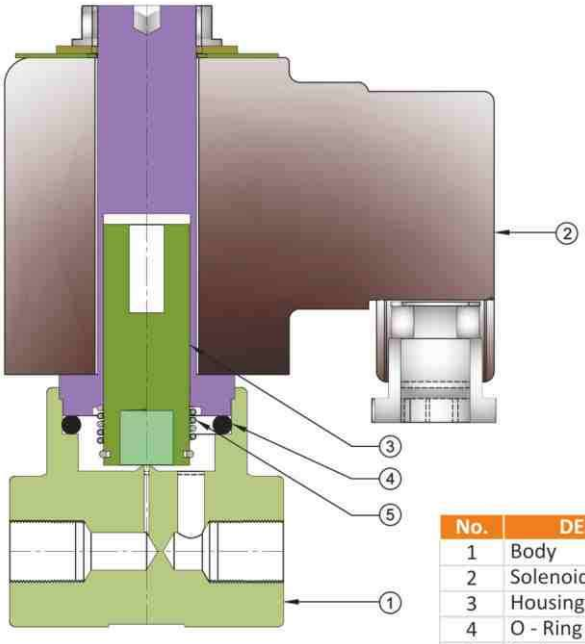

No.	DESCRIPTION	MATERIAL	QTY
1	Body	Brass	01
2	Solenoid Coil Casting	STD.	01
3	Housing	STD.	01
4	O - Ring	NBR / Viton	01
5	Spring	SS 304	01

Dimensions : (All dimensions are in MM)

SIZE		Group-I			
MM	Inch	A	B	C	Weight
6	1/4"	41	75	9.4	0.300
10	3/8"	---	---	---	---
15	1/2"	50	82	13.8	0.400

Dimensions : (All dimensions are in MM)

SIZE		Group-II			
MM	Inch	A	B	C	Weight
6	1/4"	50	100	14	0.950
10	3/8"	50	100	14	0.900
15	1/2"	50	100	14	0.900

Note : Since, constant worldwide advancement in technology, We keep our rights reserved to make changes time to time in Technical specifications and Dimensions without prior notice.

Pub. on: January, 2015 (Rev.-01)

2/2 Way Pilot Operated
Diaphragm Solenoid Valve

Catalogue No.
APL / 2022

aira
VALVE AUTOMATION
ISO 9001 CO.

"aira"

For Steam and hot water application utpo 5 bar pressure NORMALLY CLOSED, ENERGISED TO OPEN

Size Range : 3/4"

Technical Specifications :	
Pressure	0 to 5 Kg/cm^2
Temperature	85 °C
End Connection	Screwed End (BSP)
Coil Voltage	12V, 24V, 48V, 110V, 230V, AC/DC
Coil Insulation	Class "F"
Media	Air, Water & Gas

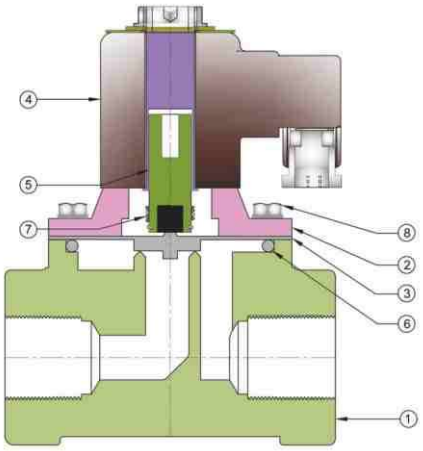

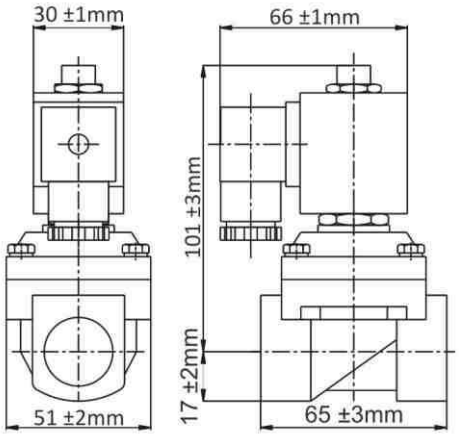

No.	Description	Material	Qty.
01	Body	CF8 / CF8M	01
02	Cover	CF8 / CF8M	01
03	Diaphragm	NBR	01
04	Solenoid Coil	STD.	01
05	Housing Set	STD.	01
06	'O' - Ring	NBR	01
07	Spring	S. S. 304	01
08	Hex Bolt with Washer	S. S. 202	04

2/2 Way
Direct Acting Solenoid Valve

Catalogue No.
APL / 2023

aira
VALVE AUTOMATION
ISO 9001 CO.

"aira"

For Air and water application utpo 9 bar pressure NORMALLY CLOSED, ENERGISED TO OPEN

Size Range : 1/4"

Technical Specifications :	
Model	RMO
Pressure	0 to 9 Kg/cm^2
Orifice	1.2 mm
Temperature	85 °C
Coil Voltage	12V, 24V, 48V, 110V, 230V, AC/DC
Coil Insulation	Class "F"
End Connection	Screwed End (BSP)

No.	Description	Material	Qty.
01	Body	Alluminium, Brass, CF8	01
02	Solenoid Coil	STD.	01
03	Housing Set	STD.	01
04	'O' - Ring	NBR	01
05	Spring	S. S. 304	01
06	M O Pin	S. S. 304	01

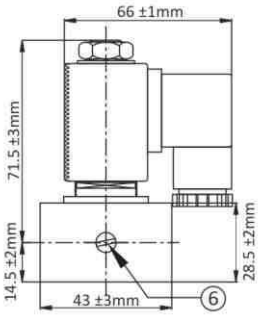

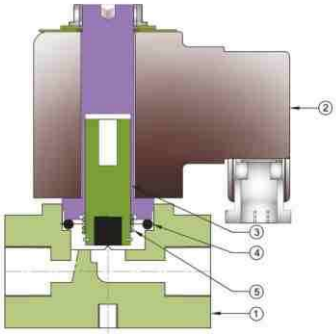

Pub. on: January, 2015 (Rev.-01)

2/2 Way

Direct Acting Solenoid Valve

Catalogue No.
APL / 2024

VALVE AUTOMATION
ISO 9001 CO.

"aira"

Offers 2/2 way direct acting solenoid valves are the best for the inflammable media. The Flameproof Explosion proof solenoid coils are available in such application.

Size Range : 1/2" Screwed

Type : Normally Close

Technical Specifications :	
Model	"AGR - 62"
Pressure	0 to 2.5 Kg/cm^2
Temperature	85 °C
Orifice	6 mm
End Connection	Screwed End (BSP)
Coil Voltage	12V, 24V, 48V, 110V, 230V, AC/DC
Coil Insulation	Class "F"

- Compact design light weight & long durability.
- Constructed from advance technology & design.
- 600 Operation per minute.
- Easy installation, Universal mounting.

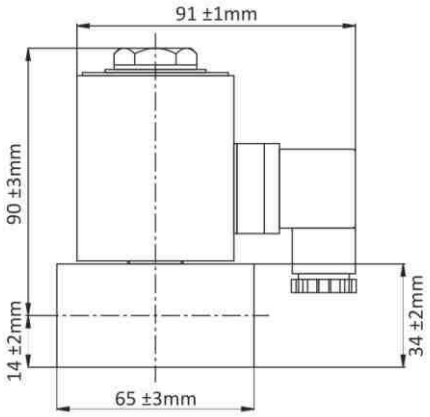

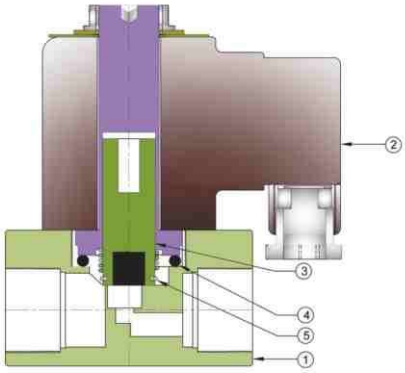

No.	Description	Material	Qty.
01	Body	Alluminium, Brass, CF8	01
02	Solenoid Coil	STD.	01
03	Housing Set	STD.	01
04	'O' - Ring	NBR	01
05	Spring	S. S. 304	01

2/2 Way

Direct Acting Solenoid Valve

Catalogue No.
APL / 2025

VALVE AUTOMATION
ISO 9001 CO.

Size Range : 1/4"

Technical Specifications :	
Model	"AGR - 41"
Pressure	0 to 6 Kg/cm^2
Orifice	4 mm
Temperature	85 °C
Coil Voltage	12V, 24V, 48V, 110V, 230V, AC/DC
Coil Insulation	Class "F"
End Connection	Screwed End (BSP)

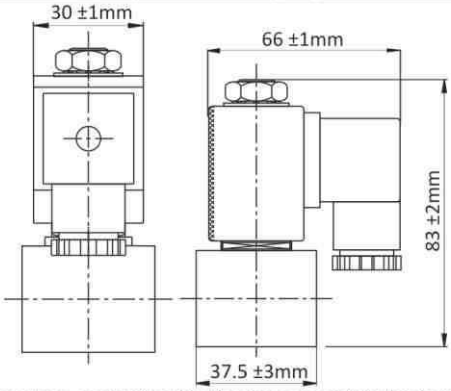

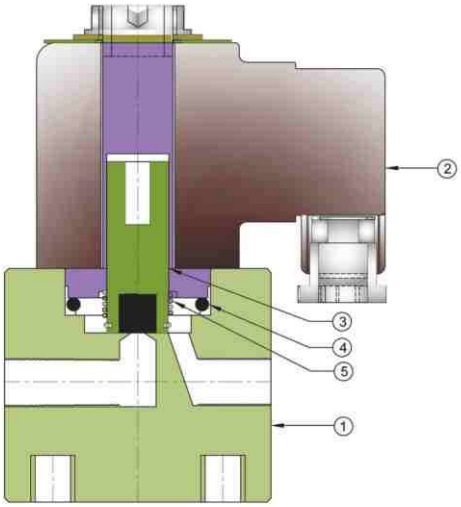

No.	Description	Material	Qty.
01	Body	Alluminium, Brass, CF8	01
02	Solenoid Coil	STD.	01
03	Housing Set	STD.	01
04	'O' - Ring	NBR	01
05	Spring	S. S. 304	01

Note : Since, constant worldwide advancement in technology, We keep our rights reserved to make changes time to time in Technical specifications and Dimensions without prior notice.

Pub. on: January, 2015 (Rev.-01)

2/2 Way Semi Steam
Direct Acting Solenoid Valve

Catalogue No.
APL / 1035

aira
VALVE AUTOMATION
ISO 9001 CO.

"aira"

Offers 2/2 way direct acting solenoid valves are the best for the inflammable media. The Flameproof Explosion proof solenoid coils are available in such application.

Size Range : 1/4" & 1/2" Screwed BSP / NPT

Technical Specifications :	
Pressure	0 to 12 Kg/cm²
Temperature	Upto 150 °C
Port Size	2.5 mm
End Connection	Screwed End (BSP)
Coil Voltage	12V, 24V, 48V, 110V, 230V, AC/DC
Coil Insulation	Class "H"
Media	Oil / Water / Chemical / Steam Hot Water

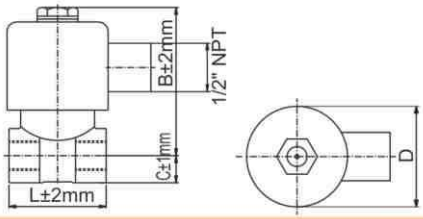

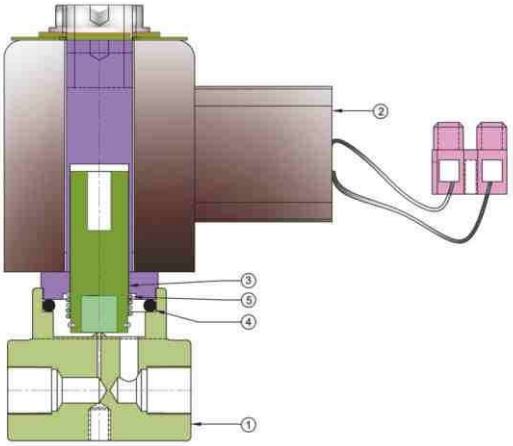

Dimensions : (All dimenisons are in MM)

Valve Model	Valve Size MM	Valve Size Inch	L	B	C	D	Weight (Approx) Kgs.
SSDA - 6	6	1/4"	41	71.5	9.5	51.9	0.450
SSDA -15	15	1/2"	50	100	14	51.9	0.450

No.	Description	Material	Qty.
01	Body	Brass, CF8	01
02	Solenoid Coil	STD.	01
03	Housing Set	STD.	01
04	'O' - Ring	NBR	01
05	Spring	S. S. 304	01

2/2 Way Pilot Operated
Direct Acting Solenoid Valve

Catalogue No.
APL / 1036

aira
VALVE AUTOMATION
ISO 9001 CO.

"aira"

For Steam and hot water application upto 10 bar pressure NORMALLY CLOSED, ENERGISED TO OPEN

Size Range : 1/4" & 1/2"

Technical Specifications :	
Model	WSV
Pressure	0 to 9 Kg/cm²
Orifice	1.2 mm
Temperature	Steam : 150 °C
	Hot Water : 95 °C
Coil Insulation	Class "H"
End Connection	Screwed End (BSP)

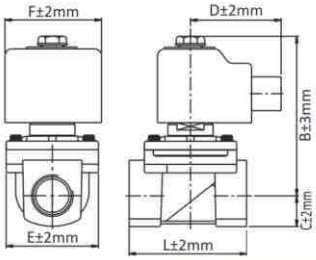

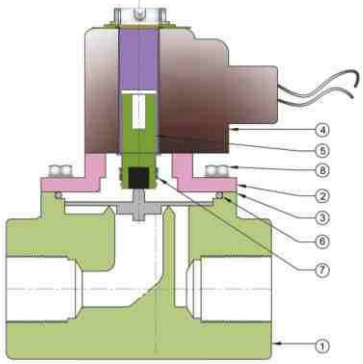

Dimensions : (All dimenisons are in MM)

Valve Model	Valve Size MM	Valve Size Inch	L	B	C	D	Weight (Approx) Kgs.
WSV - 6	6	1/4"	41	71.5	9.5	51.9	0.450
WSV -15	15	1/2"	50	100	14	51.9	0.450

No.	Description	Material	Qty.
01	Body	CF8 / CF8M	01
02	Cover	CF8 / CF8M	01
03	Diaphragm	Glass Field Seat	01
04	Solenoid Cover	STD.	01
05	Housing Set	STD.	01
06	'O' - Ring	NBR	01
07	Spring	S. S. 304	01
08	Cover Fitting + Bolt with Washer	S. S.	01

Pub. on: January, 2015 (Rev.-01)

2/2 Way Angle Type

Dust Collector Pulse Valve

Catalogue No.
APL / 1028

aira
VALVE AUTOMATION
ISO 9001 CO.

"aira"

Offers high performance diaphragm operated pulse and pilot solenoid valves with threaded ports. Available with integral pilot or as remotely pilot valves. Out let at 90° to inlet. The pulse valves have just one moving part, the Springless construction of diaphragm providing fast ON-OFF operation. This high speed operation saves compressed air and provides kind of shock wave necessary to free the dust from filter bags.

Size Range : 1/2" to 1"Screwed

Suitable For :

Dust collector application, in particular for reverse pulse jet filter cleaning including bag filters, cartridge filters, envelope filters, ceramic filters and sintered metal fiber filters.

Technical Specifications :	
Pressure Rating	0.6 to 8.5 Bar Max
Temperature	Rated for 80 °C max. For high temperature upto 125 °C Viton Diaphragm with Viton seat can be provide
Coil Voltage	12V, 24V, 48V, 110V, 230V, AC/DC
Coil Insulation	"F" Class
Coil Encloser Meets	IP 67 (Flame Proof / Explosion Proof as Per IS IEC 60079-1 STD for Class II A, II B, II C Zone
Coil Rating	Continuous Rated

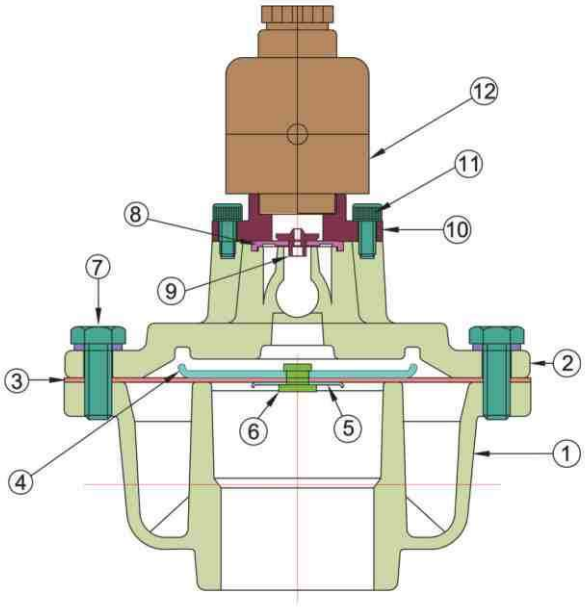

No.	Description	Material	Qty.
01	BODY	ALLUMINIUM	01
02	COVER	ALLUMINIUM	01
03	DIAPHGRAM	NBR	01
04	BIG WASHER	S.S.304	01
05	SMALL WASHER	S.S.304	01
06	RIVETING PIN	S.S.304	01
07	HEX BOLT + WASHER	S.S.	06
08	SMALL DIAPHRAGM	NBR	01
09	DIAPHRAGM PIN	BRASS	01
10	ADAPTOR	ALLUMINIUM	01
11	HEX BOLT + WASHER	S.S.	02
12	COIL	STD.	01

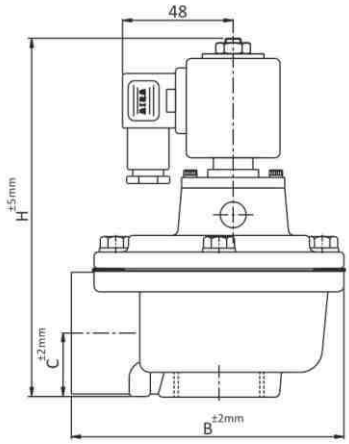

Dimensions : (All Dimensions are in mm)

Valve Model	Valve Size		Orifice	B	C	H	Flow Factor RVM³ / Hr	Weight (App.) Kgs.
	MM	Inch						
ASDA - 15	15	1/2"	29	89.5	24	131.5	11	0.700
ASDA - 20	20	3/4"	29	89.5	24	131.5	17	0.650
ASDA - 25	25	1"	29	89.5	23	131.5	43	0.600

Note : Since, constant worldwide advancement in technology, We keep our rights reserved to make changes time to time in Technical specifications and Dimensions without prior notice.

Pub. on: January, 2015 (Rev.-01)

2/2 Way Angle Type

Dust Collector Union Type Pulse Valve

Catalogue No.
APL / 2037

VALVE AUTOMATION
ISO 9001 CO.

"aira"

Offers high performance diaphragm operated pulse and pilot solenoid valves with threaded ports. Available with integral pilot or as remotely pilot valves. Out let at 90° to inlet. The pulse valves have just one moving part, the Springless construction of diaphragm providing fast ON-OFF operation. This high speed operation saves compressed air and provides kind of shock wave necessary to free the dust from filter bags.

Size Range : 1" to 1.1/2" Screwed

Suitable For :

Dust collector application, in particular for reverse pulse jet filter cleaning including bag filters, cartridge filters, envelope filters, ceramic filters and sintered metal fiber filters.

Technical Specifications :	
Pressure Rating	0.6 to 8.5 Bar Max
Temperature	Rated for 80 °C max. For high temperature upto 125 °C Viton Diaphragm with Viton seat can be provide
Coil Voltage	12V, 24V, 48V, 110V, 230V, AC/DC
Coil Insulation	"F" Class
Coil Encloser Meets	IP 67 (Flame Proof / Explosion Proof as Per IS IEC 60079-1 STD for Class II A, II B, II C Zone
Coil Rating	Continuous Rated

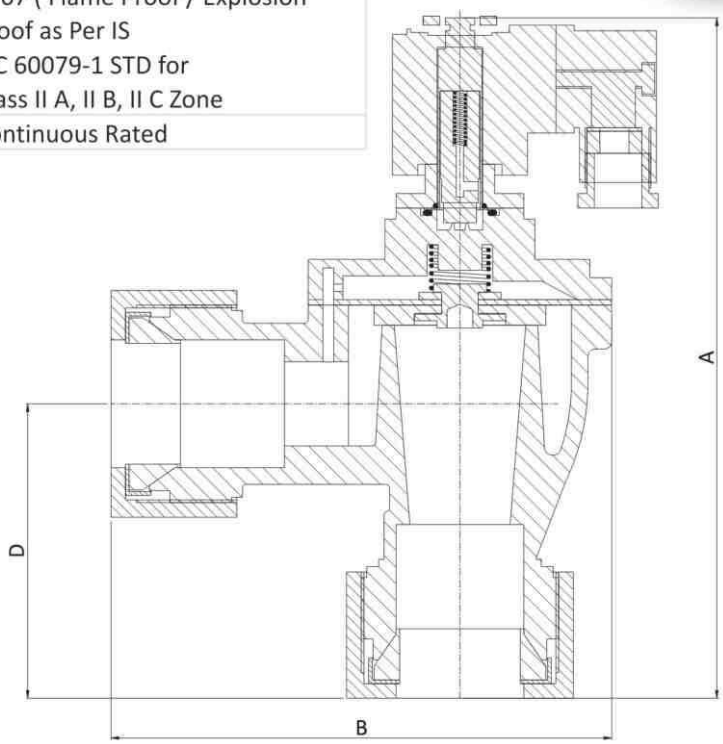

Dimensions : (All Dimensions are in mm)

Valve Model	Valve Size		A	B	D
	MM	Inch			
ASDD-25	25	1"	185	127	83
ASDD-40	40	1.1/2"	236	178	92

Note : Since, constant worldwide advancement in technology, We keep our rights reserved to make changes time to time in Technical specifications and Dimensions without prior notice.

Pub. on: January, 2015 (Rev.-01)

2/2 Way Angle Type

Dust Collector Pulse Valve

Catalogue No.
APL / 2038

aira
VALVE AUTOMATION
ISO 9001 CO.

"aira"

Offers high performance diaphragm operated pulse and pilot solenoid valves with threaded ports. Available with integral pilot or as remotely pilot valves. Out let at 90° to inlet. The pulse valves have just one moving part, the Springless construction of diaphragm providing fast ON-OFF operation. This high speed operation saves compressed air and provides kind of shock wave necessary to free the dust from filter bags.

Size Range : 1/2" to 3" Screwed

Technical Specifications :	
Pressure Rating	0.6 to 8.5 Bar Max
Temperature	Rated for 80 °C max. For high temperature upto 125 °C Viton Diaphragm with Viton seat can be provide
Coil Voltage	12V, 24V, 48V, 110V, 230V, AC/DC
Coil Insulation	"F" Class
Coil Encloser Meets	IP 67 (Flame Proof / Explosion Proof as Per IS IEC 60079-1 STD for Class II A, II B, II C Zone
Coil Rating	Continuous Rated

Single Diaphragm

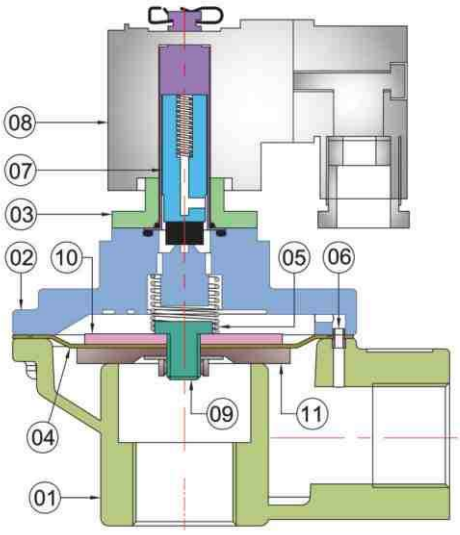

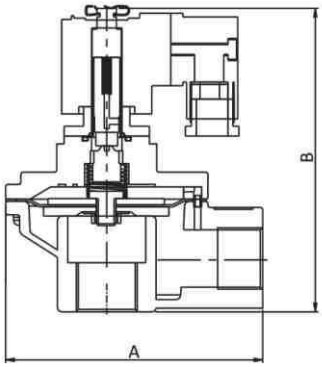

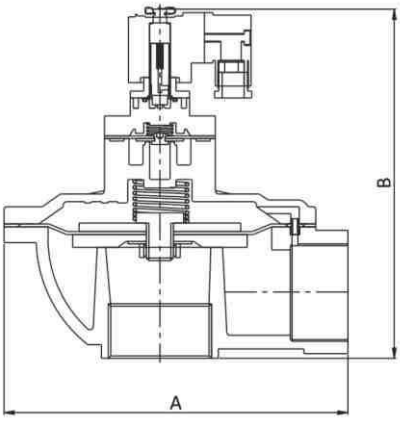

No.	Description	Material	Qty.
01	Body	Aluminium	01
02	Cover	Aluminium	01
03	Adapter	Aluminium	01
04	Diaphragm	NBR / Viton	01
05	Spring	S. S. 304	01
06	Brass Pin	Brass	01
07	Plunger	STD	01
08	Coil	STD	01
09	Bolt	S. S. 304	01
10	Flat Washer	Aluminium	01
11	Gasket	NBR	01

Double Diaphragm

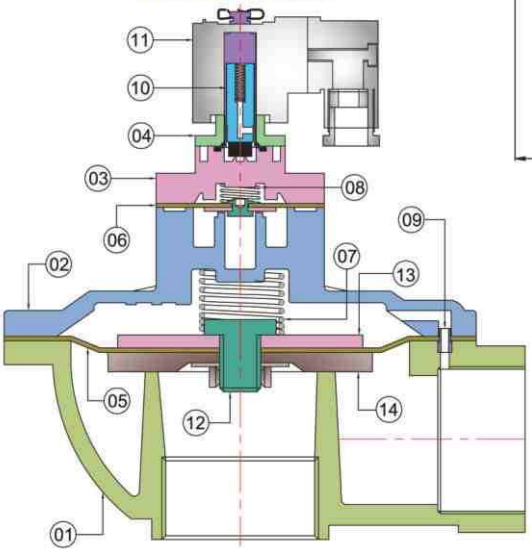

No.	Description	Material	Qty.
01	Body	Aluminium	01
02	Big Cover	Aluminium	01
03	Small Cover	Aluminium	01
04	Adapter	Aluminium	01
05	Big Diaphragm	NBR / Viton	01
06	Small Diaphragm	NBR / Viton	01
07	Big Diaphragm Spring	S. S. 304	01
08	Small Diaphragm Spring	S. S. 304	01
09	Brass Pin	Brass	01
10	Plunger	STD.	01
11	Coil	STD.	01
12	Diaphragm Bolt	STD.	01
13	Flat Washer	Aluminium	01
14	Gasket	NBR	01

Dimensions : (All dimenisons are in MM)

Valve Model	Valve Size		A	B
	Orifice	Inch		
QSDA-15	15	1/2"	102	125
QSDA-20	20	3/4"	105	125
QSDA-25	25	1"	105	123.5
QSDA-35	35	1.1/2"	120	143
QSDA-45	45	1.1/2"	138	175
QSDA-50	50	2"	205	205
QSDA-62	62	2.1/2"	210	222
QSDA-76	76	3"	230	245

Note : Since, constant worldwide advancement in technology, We keep our rights reserved to make changes time to time in Technical specifications and Dimensions without prior notice.

Pub. on: January, 2015 (Rev.-01)

aira®

VALVE AUTOMATION
ISO 9001 CO.

SERIES : F

Suzhik

Drum Type of Control Valves

DESIGN PATTERN REGISTERED

P NEUMATIC ACTUATOR OPERATED DRUM VALVE

E LECTRIC ACTUATOR OPERATED DRUM VALVE

S OLENOID OPERATED DRUM VALVE

Drum Valve
Pneumatic Operated

Catalogue No.
APL / 1092

aira
VALVE AUTOMATION
ISO 9001 CO.

Suzhik

Design Registered
No.: 234471

Size Range : 2" to 24" Flanged End

"Suzhik" Multi function Pneumatic Drum Type Control Valve can be used as isolating valve and also for flow controlling application. Special Design Namur style Ball Valve mounted on main valve, couple with Pneumatic Actuator for operation. Its simple Technique and heavy duty design impact a unique stands against other Control valve. High Flow factor and simple Pilot Control makes its very user friendly.

Features

- Exclusive smart design for Big size & cross country Water line Projects.
- High Cv Value, with Low Pressure Hammering
- Choice of operating Control available in Pneumatic Actuator like On Off / Modulating / On-Off with Feedback
- On-Off & Proportionate (Modulating) control having Input Single of 4~20mA available in Pneumatic Actuator
- Precise Pressure control and repeatability can be achieved for Proportionate Control Application.

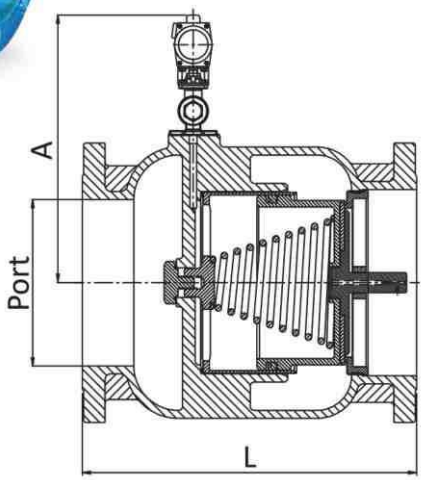

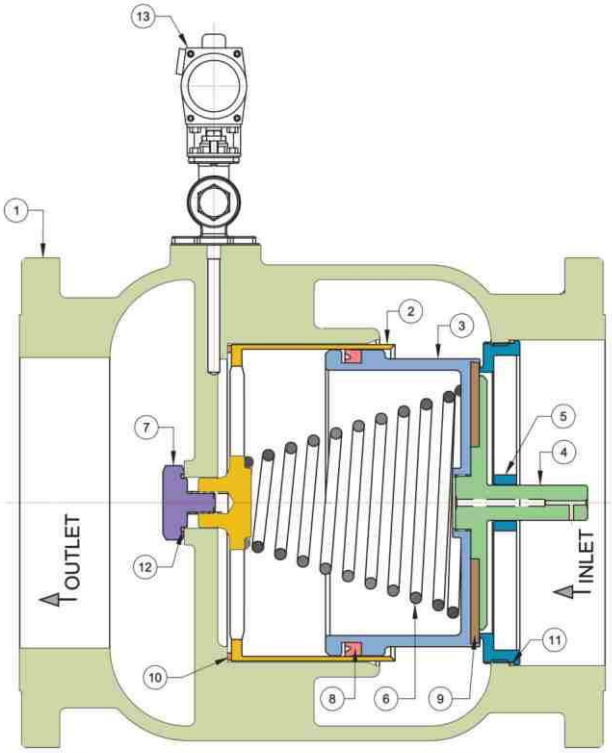

Dimensions : (All Dimensions are in mm)

Valve Model	Valve Size MM	Valve Size Inch	Port	A	L	CV	Weight Approx.
DNF - 50	50	2"	59	257.5	190	75	10.380
DNF - 65	65	2.1/2"	69	267.5	210	105	13.160
DNF - 80	80	3"	84	282.5	225	140	18.780
DNF - 100	100	4"	110	295	250	260	24.540
DNF - 125	125	5"	131.5	313.5	280	390	50.760
DNF - 150	150	6"	158.5	336.5	310	550	50.760
DNF - 200	200	8"	208.5	374.5	420	1000	93.500
DNF - 250	250	10"	257	407.5	470	1699	125.520
DNF - 300	300	12"	302	441.5	530	2200	198.040
DNF - 350	350	14"	324	485	600	3000	266.100
DNF - 400	400	16"	345	485	604	4000	279.800
DNF - 450	450	18"	472	568	766.2	5300	458.500
DNF - 500	500	20"	472	568	772.7	6100	492.650
DNF - 600	600	24"	590	630	900	9200	----

No.	Description	Material
01	Body	C. I. / WCB / CF8 / CF8M
02	Cover	Stainless Steel 304 / 316
03	Plug	Stainless Steel 304 / 316
04	Piston	Stainless Steel 304 / 316
05	Piston Guide	Stainless Steel 304 / 316
06	Spring For Piston	S. S. 304
07	Piston Cover Lock Bolt	S. S.
08	V-Seal For Piston	NBR / Viton / EPDM
09	Piston Seat Ring	NBR / Viton / EPDM
10	Flat Ring	NBR / Viton / EPDM
11	O-Ring For Piston Guide	NBR / Viton / EPDM
12	O-Ring For Piston Lock Bolt	NBR / Viton / EPDM
13	Pneumatic Actuator Operated	Drum Type Pneumatic Actuator Operated Ball Valve

Note : Since, constant worldwide advancement in technology, We keep our rights reserved to make changes time to time in Technical specifications and Dimensions without prior notice.

Pub. on: January, 2015 (Rev.-01)

Drum Valve
Electric Operated

Catalogue No.
APL / 1093

aira
VALVE AUTOMATION
ISO 9001 CO.

Size Range : 2" to 24" Flanged End

"Suzhik" Multi function Motorized Drum Type Control Valve can be used as isolating valve and also for flow controlling application. Special Design Namur style Ball Valve mounted on main valve, couple with Electrical Actuator for operation. Actuator principle works on simple 220 V AC Supply. Its simple Technique and heavy design impact a unique stands against other Control Valve. High Flow factor and simple pilot Control makes its very user friendly

Suzhik

Design Registered
No.: 234471

Features

- Exclusive smart design having motorized function used for Bigger sizes Municipal water Supply Boards & cross country Pipe line Projects.
- High Cv Value, with Low Pressure Hammering via smooth operation in Actuator
- Choice of operating Control available in Electrical Actuator like On Off / Modulating / On-Off with Feedback
- On-Off & Proportionate (Modulating) control having Input Single of 4~20mA available in Electrical Actuator
- Precise Pressure control and repeatability can be achieved for Motorized Proportional Control Application.
- Low Noise & Friction at the time of Controlling. Vertical & Horizontal installation can be done.

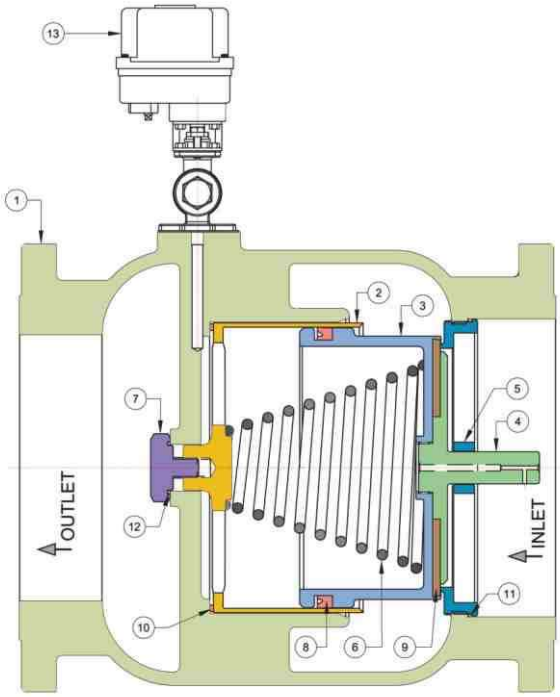

No.	Description	Material
01	Body	C. I. / WCB / CF8 / CF8M
02	Cover	Stainless Steel 304 / 316
03	Plug	Stainless Steel 304 / 316
04	Piston	Stainless Steel 304 / 316
05	Piston Guide	Stainless Steel 304 / 316
06	Spring For Piston	S. S. 304
07	Piston Cover Lock Bolt	S. S.
08	V-Seal For Piston	NBR / Viton / EPDM
09	Piston Seat Ring	NBR / Viton / EPDM
10	Flat Ring	NBR / Viton / EPDM
11	O-Ring For Piston Guide	NBR / Viton / EPDM
12	O-Ring For Piston Lock Bolt	NBR / Viton / EPDM
13	Electric Actuator Operated	Drum Type Electric Actuator Operated Ball Valve

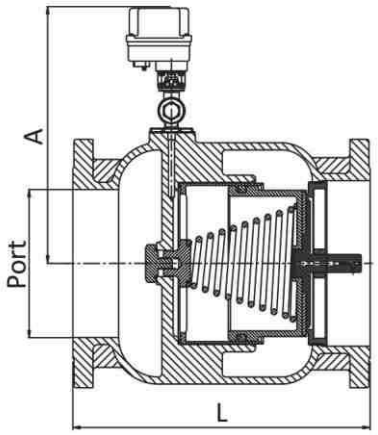

Dimensions : (All Dimensions are in mm)

Valve Model	Valve Size		Port	A	L	CV	Weight Approx.
	MM	Inch					
DEF - 50	50	2"	59	292.5	190	75	10.080
DEF - 65	65	2.1/2"	69	300	210	105	12.860
DEF - 80	80	3"	84	317.5	225	140	18.480
DEF - 100	100	4"	110	325	250	260	24.240
DEF - 125	125	5"	131	348.5	280	390	50.460
DEF - 150	150	6"	158	365	310	550	50.460
DEF - 200	200	8"	208	409.5	420	1000	93.200
DEF - 250	250	10"	257	442.5	470	1699	125.220
DEF - 300	300	12"	302	476.5	530	2200	197.740
DEF - 350	350	14"	324	520	600	3000	265.800
DEF - 400	400	16"	345	520	604	4000	279.500
DEF - 450	450	18"	472	603	766.2	5300	458.200
DEF - 500	500	20"	472	603	772.7	6100	492.350
DEF - 600	600	24"	590	828	900	9200	-----

Note : Since, constant worldwide advancement in technology, we keep our rights reserved to make changes time to time in Technical specifications and Dimensions without prior notice.

Pub. on: January, 2015 (Rev.-01)

Drum Valve
Solenoid Operated

Suzhik

Design Registered
No.: 234471

Catalogue No.
APL / 1091

aira
VALVE AUTOMATION
ISO 9001 CO.

Size Range : 2" to 24" Flanged End

Features

- Valve Body is made by Stainless Steel #316, suitable for fluid, air and steam.
- The gate is balanced-pressure designed, which will not influence the outlet pressure caused by unstable inlet pressure.
- When the outlet pressure responds directly to the pressure control chamber and adjusts the setting pressure, it responds quickly and adjusts the pressure accurately
- Design of piston and diaphragm improves the inability of sustaining pressure and leakage.
- Pressure Adjusting Range : 1 ~ 6 kgf/cm^2, 4 ~ 10 kgf/cm^2, 8 ~ 13 kgf/cm^2
- Pressure needed from fully-closed gate to fully-opened gate : 1.5 kgf/cm^2 (1 kgf/cm^2 = 14.2 psi)
- Applied Temperature : -15 ~ 100 °C, 100 ~ 180 °C (For steam)
- Valve Body Testing Pressure : 35 kgf/cm^2
- Maximum Applied Pressure : 25 kgf/cm^2

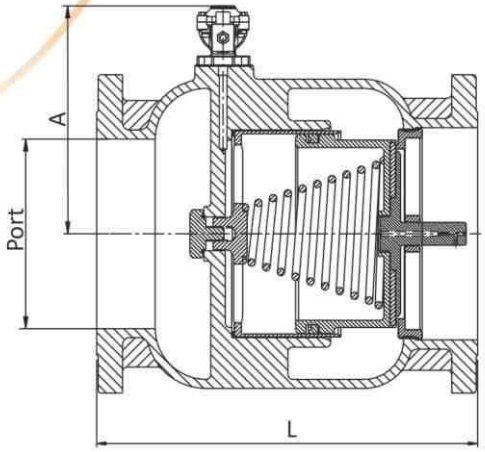

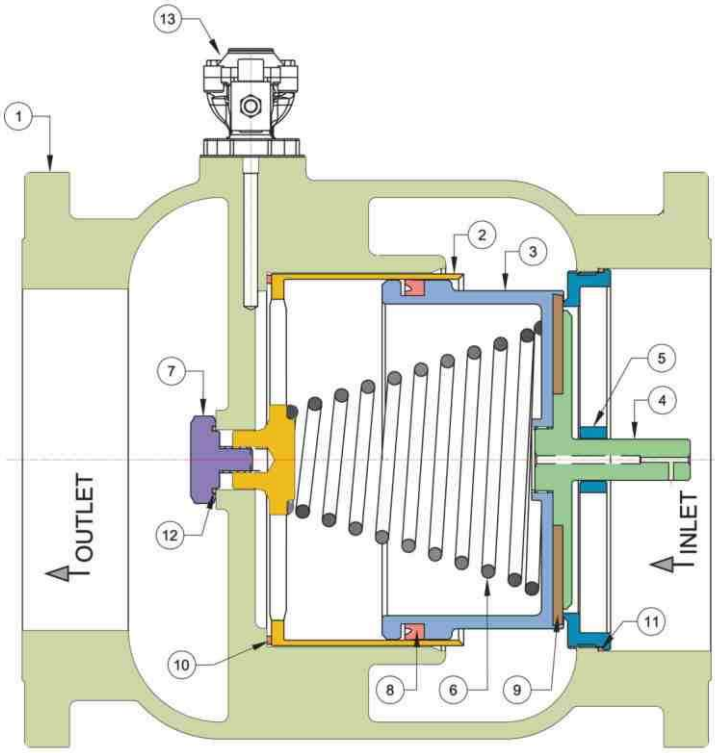

Dimensions : (All Dimensions are in mm)

Valve Model	Valve Size MM	Valve Size Inch	Port	A	L	CV	Weight Approx.
DFS - 50	50	2"	59	137.5	190	75	8.980
DFS - 65	65	2.1/2"	69	147.5	210	105	11.760
DFS - 80	80	3"	84	162.5	225	140	17.380
DFS - 100	100	4"	110	175	250	260	23.140
DFS - 125	125	5"	131	193.5	280	390	49.360
DFS - 150	150	6"	158	216.5	310	550	49.360
DFS - 200	200	8"	208	254.5	420	1000	92.100
DFS - 250	250	10"	257	287.5	470	1699	124.120
DFS - 300	300	12"	302	321.5	530	2200	196.640
DFS - 350	350	14"	324	365	600	3000	264.700
DFS - 400	400	16"	345	365	604	4000	278.400
DFS - 450	450	18"	472	448	766.2	5300	457.100
DFS - 500	500	20"	472	448	772.7	6100	491.250
DFS - 600	600	24"	590	510	900	9200	----

No.	Description	Material
01	Body	C. I. / WCB / CF8 / CF8M
02	Cover	Stainless Steel 304 / 316
03	Plug	Stainless Steel 304 / 316
04	Piston	Stainless Steel 304 / 316
05	Piston Guide	Stainless Steel 304 / 316
06	Spring For Piston	S. S. 304
07	Piston Cover Lock Bolt	S. S.
08	V-Seal For Piston	NBR / Viton / EPDM
09	Piston Seat Ring	NBR / Viton / EPDM
10	Flat Ring	NBR / Viton / EPDM
11	O-Ring For Piston Guide	NBR / Viton / EPDM
12	O-Ring For Piston Lock Bolt	NBR / Viton / EPDM
13	Solenoid Valve	Drum Type Solenoid Valve STD.

Note : Since, constant worldwide advancement in technology, We keep our rights reserved to make changes time to time in Technical specifications and Dimensions without prior notice.

Pub. on: January, 2015 (Rev.-01)

VALVE AUTOMATION
ISO 9001 CO.

SERIES : G

Accessories

ISO 9001 : 2008 BUREAU VERITAS Certification | UKAS | 609 - 0055 | IS / IEC 60079-1 IST CM/L-3812155 | CIMFR | CE | IBR | CCEO Nagpur

Rotary / Linear Type

Pneumatic - Pneumatic Valve Positioner

Catalogue No.
APL / 1049

aira
VALVE AUTOMATION
ISO 9001 CO.

"aira" Pneumatic-Pneumatic Positioner (3-15 pst / rotary off linear type) are advanced control devices which provide unparalleled stability in difficult environment.

Description

The **"aira"** APP-1200-R/L sesries positioners converts a controller output (usually 3 to 15 psig to Linearly/Rotary proportional Trave/Rotational & Pneumatic outputs. The Positioners are based on a force balance desing for control applications that requires a high degree of reliability & repeatability at an economical cost. Optional NEMA 4X (IP65/IP66)-explosion proof versions allows for splashdown/explosive atmosphere and outdoor installation.

The **"aira"** APP-1200-R/L series positioners are used for Liner/Rotary movement with ranges 3-9 and 9-15 psig.control sigal, when you select split range. Standard rang is 3-15 psig. The positioners can handle the supply pressure upto 100 psig for higher pressure Industrial pneumatic and process control system requirements.

Principle of Operation

The operation of **"aira"** APP-1200-R/L series positioners is based on a force balanced system. Tension on the feedback spring provides feedback to the positioner which will vary as the actuator shaft rotates with cam. The spring Loading force is applied through the cam shaft & cam to the positioner's instrument signal capsule through the balance beam.

Output form the controller (usually 3-15 Psig) is applied to the diaphragm in the instrument signal capsule serving as a force balance membrane, matching the actuator shaft position to the instrument signal.

Split Ranging

If split ranging is required may be mounted on Linear Actuator/Rotary Actuator as per installation and operational manual.

Mounting

The **"aira"** APP-1200-R/L FC series positioners may be mounted on Linear Actuator/Rotary Actuator as per installation and operational manual

Field Reversible

To change form direct acting to reverse acting simply reverse the cam and fix it on cam shaft and make sure of the signal SPAN which is printed on the cam and recalibrate for Actuator fully open or close position incase of Pneumatic to Pneumatic.

Features

- Designed block build structure for maintenance and repair
- Precise calibration with simple SPAN and ZERO adjustments
- Simple conversion to Direct Acting or Reverse Acting
- Split range control available by simple adjustments without changing parts
- Simple structure for feedback connection
- Corrosion-resistant alluminium die cast body
- Sensitive response for high performance
- Vibration resistant design
- Stainless Steel Gauge Standard
- A restricted pilot valve orifice kit for small actuators included
- Optional built-in limit switched or 4-20 mA position transmitter for feedback
- Optional directly-mountable positioner
- Proved the reliability through over 5,00,000 times of repeat test & Vibration test.

Integrated Characteristics

- Suitable for Rotary / Linear Actuators.
- Low Air Consumption.
- Corrosion-Resistance Aluminium Diecast Body.
- Simple Conversion to Direct Acting or Reverse Acting.
- Precise Calibration with simple SPAN and Zero Adjustments.
- Suitable for Single/Double acting Actuators.
- Split Ranging.
- Optional Built-in Limit Switches or 4-20mA Position
- Transmitter for feedback.
- Extremely Vibration Resistance Design.
- Easy Maintenance.

Application

The **"aira"** APP - 1200 R/E Positioners converts pneumatic/electrical signal to a pneumatic output which can be used to operate the following :

- Valve, Valve-Actuators
- Damper and Louver Actuators
- Air-Cylinders
- Relays
- Clutches
- Web Tensioners and Brakes

USED IN :

- Petrochemical Processing Systems
- Energy Management
- Hvac Systems
- Textile Processing Systems
- Phamraceutical Processing System
- Paper & Pulp Handling Controls

Technical Specification Table

MODEL	Linear		Rotary	
	Single	Double	Single	Double
	APP-1200-L		APP-1200-R	
Input Signal	3~15psi (0.2-1.0 kgf/cm^2) (NOTE 1)			
Supply Air Pressure	100 psi Max. (7.0 kgf/cm^2)			
Standard Stroke	10~80mm (NOTE 2)			
Air Piping Connection	1/4" NPT (F)			
Ambient Temperature	-20 °C to 70 °C			
Pressure Gauge	Stainless Steel			
Explosion-proof Classification	Exia II BT6, Exdm II BT6, Exdm II CT6			
Degree of Protection	IP66			
Pressure Gauge	Stainless Steel 0-2 kg/cm^2			
	0-4 kg/cm^2			
	0-10 kg/cm^2			
Output Characteristics	Linear			
Linearity	Within ± 1.0% F.S.			
Sensitivity	Within 0.2% F.S.			
Hysteresis	Within 0.2% F.S.			
Repeatability	Within ± 0.75% F.S.			
Air Consumption	5.0 LPM (1.4 kg/cm2) Supply			
Flow Capacity	80 LPM (1.4 kg/cm2) Supply			
Material	Alluminium Diecast Body			
Weight	1.8 Kg. (Approx)			

NOTE : 1. 1/2" split range can be adjusted
2. Feedback lever for stroke 80-150mm is available (PPL)

Note : Since, constant worldwide advancement in technology, We keep our rights reserved to make changes time to time in Technical specifications and Dimensions without prior notice.

Pub. on: January, 2015 (Rev.-01)

Rotary / Linear Type

Elector - Pneumatic Valve Positioner

Catalogue No.
APL / 1049

aira
VALVE AUTOMATION
ISO 9001 CO.

"aira" Electro-Pneumatic Positioner (4-20 m Amp, linear and rotary type) are advanced control devices which provide unparalleled stability in difficult environment.

Description

The **"aira"** AEP-1000-R/L series Electro-pneumatic are used as final controlling element for operation of pneumatic Rotary/linear valve actuators in correspondence with an input Signal of 4-20mA DC or split ranges.

The Positioners are based on a force balance design for control application that requires a high degree of reliability and repeatability at an economical cost.

The Positioners can handle the supply pressure up to 100 psig for higher pressure industrial pneumatic and process control system requirements.

Principle of Operation

The operation of **"aira"** AEP-1000-R/L series positioners is based on a force balanced system. Tension on the feedback spring provides feedback to the positioner which will vary as the actuator shaft rotates with cam. The spring Loading force is applied through the cam shaft & cam to the positioner's instrument signal capsule through the balance beam.

Input of 4-20mA DC is applied to the instrument and corresponding output is applied to the control capsule serving as force balance membrane and matching the actuator shaft position to the instrument signal.

Field Reversible

To change form direct acting to reverse acting simply reverse the cam and fix it on cam shaft and make sure of the signal SPAN which is printed on the cam and recalibrate for Actuator fully open or close position incase of Pneumatic to Pneumatic. For Electro-Pneumatic change current signal input leads form positive to negative and change current signal form 4-20 to 20-4 over and above cam reverse and recalibrate the Positioner.

Features

- Designed as block build structure for maintenance and repair
- Precise calibration with simple SPAN and ZERO adjustments
- Simple conversion to Direct Acting or Reverse Acting
- Split range control available by simple adjustments without changing parts
- Simple structure for feedback connection
- Corrosion-resistant alluminium die cast body
- Sensitive response for high performance
- Vibration resistant design
- Stainless Steel Gauge Standard
- A restricted pilot valve orifice kit for small actuators included
- Optional built-in limit switched or 4-20 mA position transmitter for feedback
- Optional directly-mountable positioner
- Proved the reliability through over 5,00,000 times of repeat test & Vibration test.

Mounting

The **"aira"** AEP-1000-R/L series positioners may be mounted on Linear Actuator/Rotary Actuator as per installation and operational manual.

Options Available

- Position Transmitter (4-20mA DC.)
- Two limit Switches.
- Valve, Valve-Actuators
- Damper and Louver Actuators
- Air-Cylinders
- Relays
- Clutches
- Web Tensioners and Brakes

Technical Specification Table

MODEL	Linear		Rotary	
	Single	Double	Single	Double
	AEP-1000-L		AEP-1000-R	
Input Signal	4~20 mA DC (NOTE 1)			
Input Resistance	235±15			
Supply Air Pressure	20~100psi (7.0 kg/cm²)			
Standard Stroke	10~80mm (NOTE 2)			
Air Piping Connection	¼ NPT (F)			
Conduit Connection	½ NPT (F)			
Explosion-proof Classification	Exia II BT6, Exdm II BT6, Exdm II CT6			
Degree of Protection	IP66			
Ambient Temperature	-20°C to 70°C			
Pressure Gauge	Stainless Steel 0-2 kg/cm2 0-4 kg/cm² 0-10 kg/cm²			
Output Characteristics	Linear / Rotary			
Linearity	Within ± 1.0% F.S.			
Sensitivity	Within 0.2% F.S.			
Hysteresis	Within 0.75% F.S.			
Repeatability	Within ± 0.5% F.S.			
Air Consumption	5.0 LPM (1.4 kg/cm²) Supply			
Flow Capacity	80 LPM (1.4 kg/cm²) Supply			
Material	Alluminium Diecast Body			
Weight	2.8 Kg. With a terminal box			

NOTE : 1. 1/2 split range can be adjusted
2. Feedback lever for stroke 80-150mm is available (PPL)

Integrated Characteristics

- Suitable for Rotary / Linear Actuators.
- Low Air consumption.
- No resonance at 5-200Hz.
- Prevents hunting by using Orifice for small size actuator.
- Simple Conversing to Direct Acting or reverse Acting.
- Precise Calibration with simple SPAN and Zero Adjustments.
- Suitable for Single/Double acting Actuators.
- Can control 1/2 split range with simple operation without replacing any parts.
- Extremely Vibration Resistance Desing.
- Easy Maintenance.
- Corrosion-Resistance Aluminium Diecast Body.

Application

The **"aira"** AEP - 1000 R/E Positioners converts pneumatic/electrical signal to a pneumatic output which can be used to operate the following :

Used In

Petrochemical Processing Systems, Energy Management, HVAC Systems, Textile Processing Systems. Phamaceutical Processing System, Paper & Pulp Handling Controls.

Pub. on: January, 2015 (Rev.-01)

Rotary / Linear Type

Elector - Pneumatic Direct Mount Positioner

Catalogue No.
APL / 2026

aira
VALVE AUTOMATION
ISO 9001 CO.

"aira" Pneumatic-Pneumatic Positioner (3-15 pst / rotary off linear type) are advanced control devices which provide unparalleled stability in difficult environment.

Electro - Pneumatic Positioner is used for operation of pneumatic Multiple springs diaphragm actuators by means of electrical or control system with an output signal of DC 4 - 20 mA or split rages

Features

- CE, CIMFR, BIS, ISI, ISO Certified, approved
- It is connected with Diaphragm actuator directly without Air pipe, and can be mounted the Filter Regulator on.
- Sturdy, tubeless and vibration resistant design
- There is no resonance at 5-200Hz.
- The change of RA/DA acting is convenient. It is able to apply to single or double acting actuator.
- It is possible to prevent the hunting with orifice to the small size actuator
- It is economical due to less air consumption.
- It is able to control the ½ split range with simple operation with replacement of parts.

Technical Specifications :

TYPE	AEP - 1500 - L	
ITEM	Rotary Type (can feedback)	
	Single	Double
Input Signal	4~20 mA DC	
Impedance	250±15Ω	
Supply Air	1.4~7kg f/cm2 (20~100psi)	
Stroke	10~150mm	
Air Connection	PT(NPT) 1/4	
Gauge Connection	PT(NPT) 1/8	
Conduit	PF ½ (G1/2)	
Explosion proof	ExdIIBT6, ExdIICT6, ExiaIIT6	
Protection	IP66	
Ambient temperature	-200C~70°C	
Linearity	± 1% F.S.± F.S.	
Hysteresis	± 1% F.S.	
Sensitivity	± 0.2% F.S.± 0.5% F.S.	
Repeatability	± 0.5%	
Air Consumption	3LMP(Sup=1.4kgf/cm², 20psi)	
Flow Capacity	80 LPM (Sup=1.4kgf/cm², 20psi)	
Material	Alluminium alloy	
Weight	2.8 Kg.(6.2lb)	

Note : Since, constant worldwide advancement in technology, We keep our rights reserved to make changes time to time in Technical specifications and Dimensions without prior notice.

Pub. on: January, 2015 (Rev.-01)

WeatherProof Micro Limit Switch Box with Dom Indicator Type ON/OFF Indicator

Catalogue No.
APL / 2039

aira
VALVE AUTOMATION
ISO 9001 CO.

Technical Specification				
Type	Mechanical Switch X 2		Proximity Sensors P&F Make	
Model	SLSB-WP-01	SLSB-WP-02	SLSB-WP-03	SLSB-WP-04
Switch	Honeywell V15	Honeywell V15	NJ2-V3-N (Upto 8V)	NBB3-V3-Z4 (Upto 10 to 60 VDC)
Type	1 NO + 1 NC	2 NO + 2 NC	----	----
Switch Rating	AC 250V 3A, 125V 5A DC 250V 0.2A, 125V 0.4A, 30V 4A			
Enclosure Protection	IP 67			
Ambient Temp.	-20 °C ~ 80 °C			
Conduit Entry	NPT 1/2" (PT 1/2", PF 1/2, M20, PG 13.5)			
Terminal	8 Points			
Mounting Bracket	Namur VDI / VDE 3845, ISO 5211			
Material	Aluminum Pressure Die Cast			

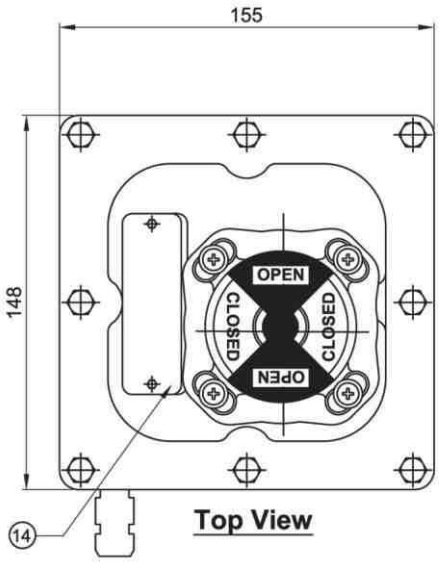

Top View

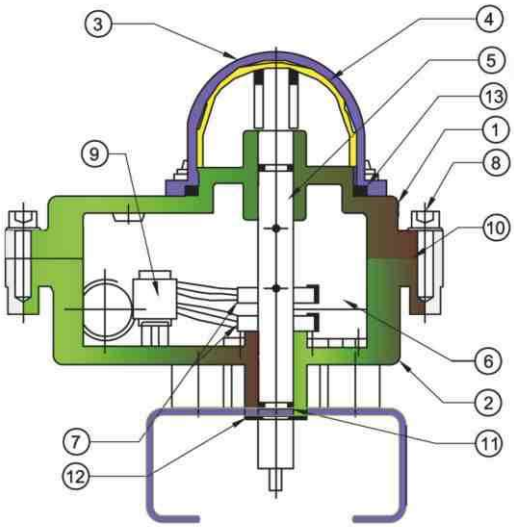

Interior View

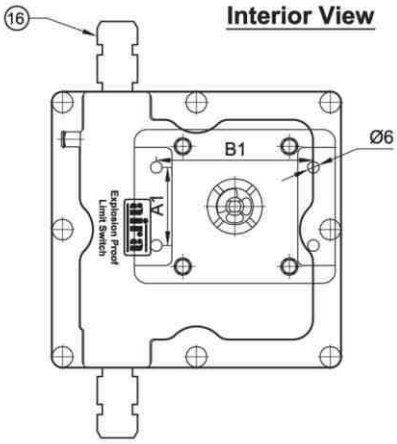

Bottom View

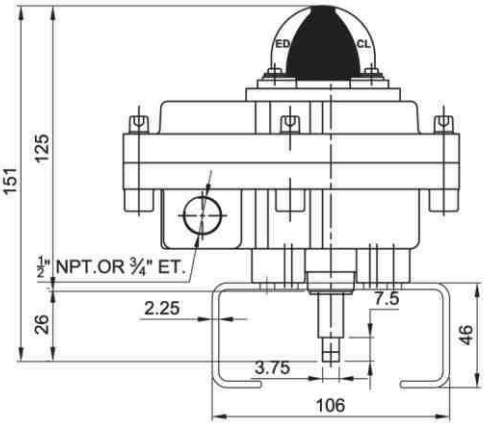

Front / Back View

Sr. No.	Description	Material
1	Enclosure Cover	Aluminium Pressure Die Cast
2	Enclosure Cover	Aluminium Pressure Die Cast
3	Visual Position Indicator Dom	Poly carbonate (Antistatic)
4	Position Indicator	ABS
5	Shaft (Operating Rod)	S. S. 304
6	Switches	STD.
7	Splined Cam	Nylon
8	Allen Head Bolt	S. S. 304
9	Terminal Block	STD.
10	'O' Ring for Cover	NBR
11	'O' Ring for Shaft	NBR
12	Circlip	S. S.
13	'O' Ring for Dom	NBR
14	Name / Warning Plate	Stainless Steel
15	Spring Washer	Stainless Steel
16	Cable Gland	M. S.

Note : Since, constant worldwide advancement in technology, We keep our rights reserved to make changes time to time in Technical specifications and Dimensions without prior notice.

Pub. on: January, 2015 (Rev.-01)

FlampProof Limit Switch Box

Catalogue No.
APL / 2040

aira
VALVE AUTOMATION
ISO 9001 CO.

Technical Specification					
Type	Mechanical Switch X 2			Proximity Sensors P&F Make	
Model	MLS-FLP-01	MLS-FLP-02	MLS-FLP-03	MLS-FLP-04	MLS-FLP-05
Switch	Honeywell V15	Honeywell V15 (PCB TYPE)	Honeywell V15	NJ2-V3-N (Upto 8 Voltage)	NBB3-V3-Z4 (Upto 10V To 60V DC)
Type	1 NO + 1 NC	1 NO + 1 NC	2 NO + 2 NC	----	----
Switch Rating	AC 250V 3A, 125V 5A DC 250V 0.2A, 125V 0.4A, 30V 4A				
Enclosure Protection	IP 67				
Ambient Temp.	-20 °C ~ 80 °C				
Conduit Entry	NPT 1/2" (PT 1/2, PF 1/2, M20, PG 13.5)				
Terminal	8 Points				
Mounting Bracket	Namur VDI / VDE 3845, ISO 5211				
Material	Aluminum Pressure Die Cast				

Feature :

- Easy settable colour coded cam
- Serrated cams locked together ensures adjusted setting secured against any vibration
- Special PCB eliminates all wiring from the switch element to the terminals, Protection against short circuit
- All Fasteners in Stainless Steel
- Water, Rain Proof to IP 67
- Additional mounting hole threaded

Sr. No.	Description	Material
1	Enclosure Cover	Aluminium Pressure Die Cast
2	Enclosure Housing	Aluminium Pressure Die Cast
3	Position Indicator Dom (External of Enclosure)	Poly carbonate (Antistatic)
4	Position Indicator (External of Enclosure)	ABS (Antistatic)
5	Shaft (Operating Rod)	S. S. 304
6	Switch	Honey Well / Cherry / Omron / Turck / P & F
7	Splined Cam	Cast Aluminium Alloy
8	Allen Head Bolt	M6 X 20 Lenght Stainless Steel
9	Terminal Block	STD.
10	'O' Ring for Cover	NBR
11	'O' Ring for Shaft	NBR
12	Circlip	S. S. Spring Steel
13	'O' Ring for Dom	NBR
14	Name / Warning Plate	Stainless Steel
15	Spring Washer	Stainless Steel
16	Internal Earthing	M4 X 8 L Stainless Steel
17	External Earthing	M4 X 8 L Stainless Steel
18	Cable Entry	M20 - 6H / Optional Entry 1/2" NPT. - 6H

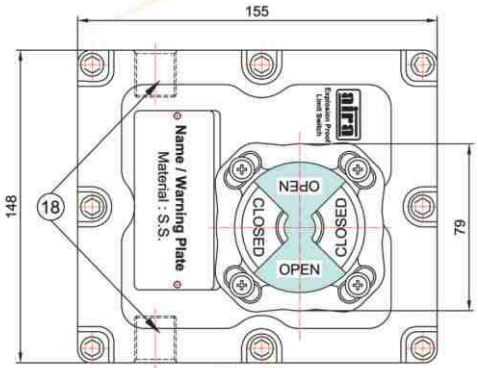

Top View

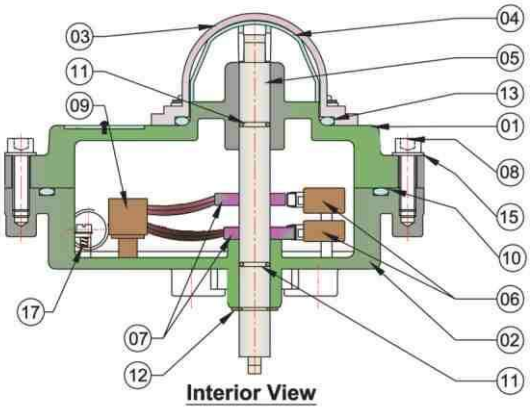

Interior View

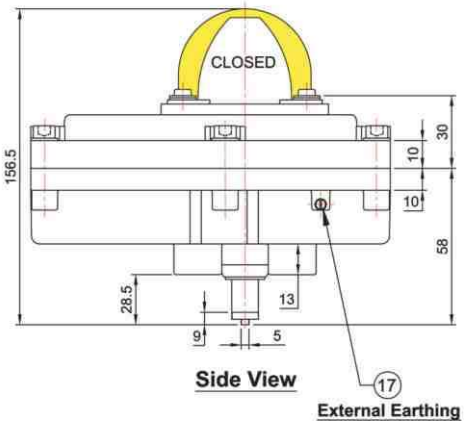

Side View

External Earthing

Note : Since, constant worldwide advancement in technology, We keep our rights reserved to make changes time to time in Technical specifications and Dimensions without prior notice.

Pub. on: January, 2015 (Rev.-01)

FlameProof Micro Limit Switch Box with Stainless Steel 304

Catalogue No.
APL / 2041

aira
VALVE AUTOMATION
ISO 9001 CO.

Technical Specification					
Type	Mechanical Switch X 2			Proximity Sensors P&F Make	
Model	LS4-FLP-01	LS4-FLP-02	LS4-FLP-03	LS4-FLP-04	LS4-FLP-05
Switch	Honeywell V15	Honeywell V15 (PCB TYPE)	Honeywell V15	NJ2-V3-N (Upto 8 Voltage)	NBB3-V3-Z4 (Upto 10V To 60V DC)
Type	1 NO + 1 NC	1 NO + 1 NC	2 NO + 2 NC	----	----
Switch Rating	AC 250V 3A, 125V 5A DC 250V 0.2A, 125V 0.4A, 30V 4A				
Enclosure Protection	IP 67				
Explosion Proof	Ex d IIC T6				
Ambient Temp.	-20 °C ~ 80 °C				
Conduit Entry	NPT 3/4" (PT 3/4, M20)				
Terminal	8 Points				
Mounting Bracket	Namur VDI / VDE 3845, ISO 5211				
Material	Stainless Steel 304 (Stainless Steel 316 On Request)				

Salient Feature :

- Visual Position Indicator
- 6 Contacts of Terminal Ports
- Compatibility with any rotary motion actuator ISO 5211
- Easy adjustment of cam position
- Dual 1/2" Conduit entries

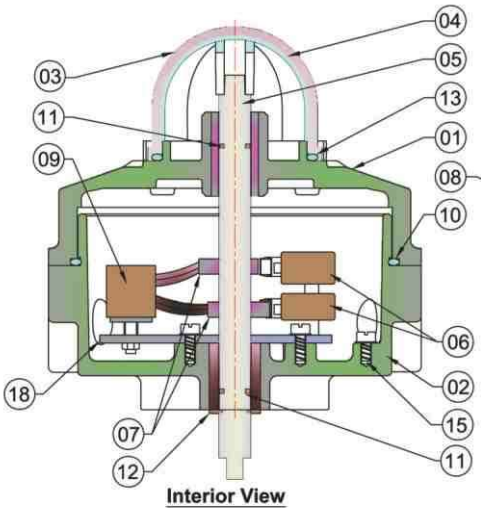

Interior View

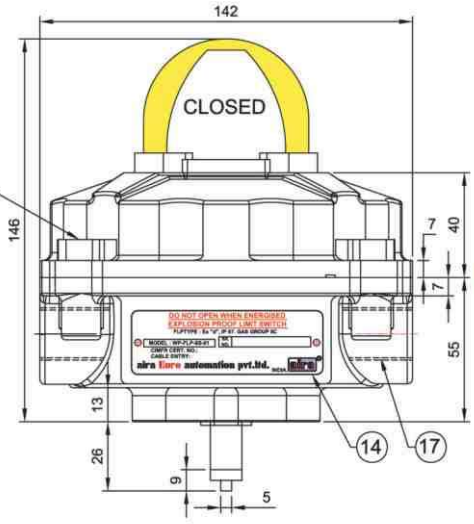

Side View

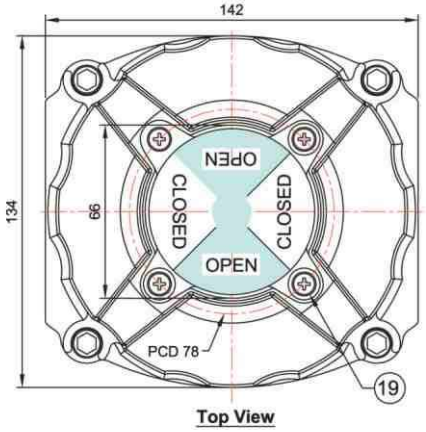

Top View

Sr. No.	Description	Material
1	Enclosure Cover	CF8 / CF8M
2	Enclosure Housing	CF8 / CF8M
3	Visual Position Indicator Dom	Poly carbonate (Antistatic)
4	Position Indicator (External of Enclosure)	ABS (Antistatic)
5	Shaft (Operating Rod)	S. S. 304
6	Switches	Honey Well / Cherry / Omron Turck / P & F
7	Splined Cam	Plastic
8	Hexgon Socket Head Cap Screw	M6 X 20 Length Stainless Steel
9	Terminal Block	STD.
10	'O' Ring for Cover	NBR
11	'O' Ring for Shaft	NBR
12	Circlip	S. S.
13	'O' Ring for Dom	NBR
14	Name / Warning Plate	Stainless Steel
15	Internal Earthing	M4 X 8 L Stainless Steel
16	Cable Entry	M20 - 6H (Optional Entry 1/2", 3/4" NPT, 3/4" ET)
17	Mounting Plate	Bakelight (PCB)
18	Dom Fitting Screw	M4 X 10L Stainless Steel

Note : Since, constant worldwide advancement in technology, We keep our rights reserved to make changes time to time in Technical specifications and Dimensions without prior notice.

Pub. on: January, 2015 (Rev.-01)

WeatherProof Limit Switch Box

Catalogue No.
APL / 2042

aira
VALVE AUTOMATION
ISO 9001 CO.

Salient Feature :

- Visual Position Indicator
- 6 Contacts of Terminal Ports
- Compatibility with any rotary motion actuator ISO 5211
- Easy adjustment of cam position
- Dual 1/2" Conduit entries

Technical Specification			
Type	Mechanical Switch X 2	Proximity Sensors P&F Make	
Model	**MLSB-WP-01**	**MLSB-WP-02**	**MLSB-WP-03**
Switch	Honeywell ZM	NJ2-V3-N (Upto 8 Voltage)	NBB-V3-Z4 (Upto 10 to 60V DC)
Type	1 NO + 1 NC	----	-----
Switch Rating	AC 250V 3A, 125V 5A DC 250V 0.2A, 125V 0.4A, 30V 4A		
Enclosure Protection	IP 67		
Ambient Temp.	-20 °C ~ 80 °C		
Conduit Entry	NPT 1/2" (PT 1/2, PF 1/2, M20, PG 13.5)		
Terminal	8 Points		
Mounting Bracket	Namur VDI / VDE 3845, ISO 5211		
Material	Aluminium Pressure Die Cast		

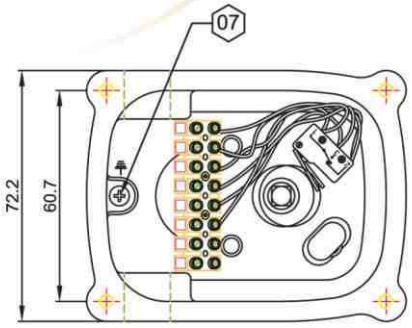

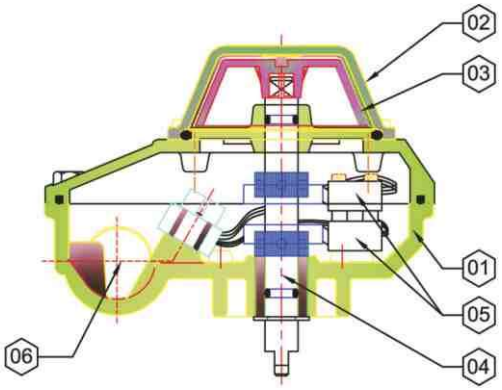

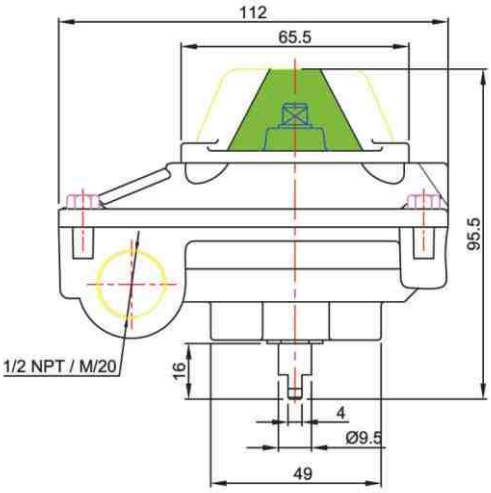

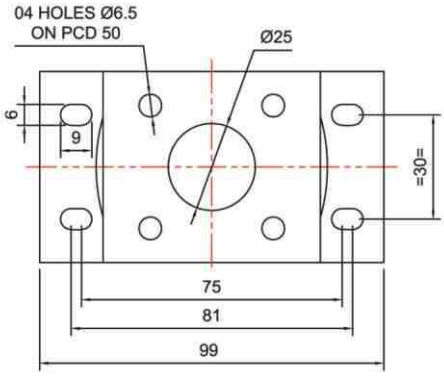

Sr. No.	Description	Material	Qty.
1	Body	Aluminium Die Cast	1
2	Position Indicator Dom (External of Enclosure)	Poly Carbonate	1
3	Position Indicator (External of Enclosure)	Yellow / Black On / Off Indicator	1
4	Shaft (Operating Rod)	S. S.	1
5	Switch	1 No + 1 NC / 2 Nos. (Honeywell)	2
6	Cable Entry	PVC	2
7	Internal Earthing	Std.	1

Note : Since, constant worldwide advancement in technology, We keep our rights reserved to make changes time to time in Technical specifications and Dimensions without prior notice.

Pub. on: January, 2015 (Rev.-01)

"AJ Series"
3/2 Way Direct Acting Solenoid Valve

Catalogue No.
APL / 2043

aira
VALVE AUTOMATION
ISO 9001 CO.

Technical Specification			
Size	1/4"		
Model	AJDS-08-202	AJDS-09-202	AJDS-10-202
Orifice	2.5 mm	2 mm	1.2 mm
Pressure	7 Kg/cm²	10 Kg/cm²	20 Kg/cm²
Flow	180	140	60
Temperature	Upto 55 °C		
Leakage	Bubble Tight		
Media	Air (Filtered & Lubricated)		
Voltage	24, 48, 110, 230V AC / 12, 24, 48, 110V DC		

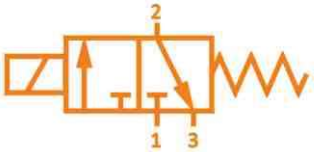

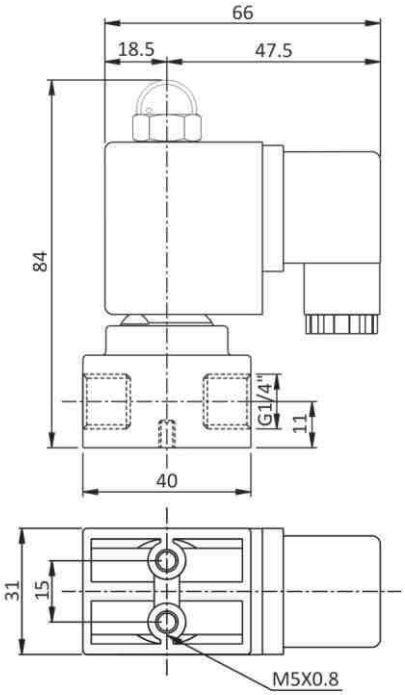

NORMALLY CLOSED

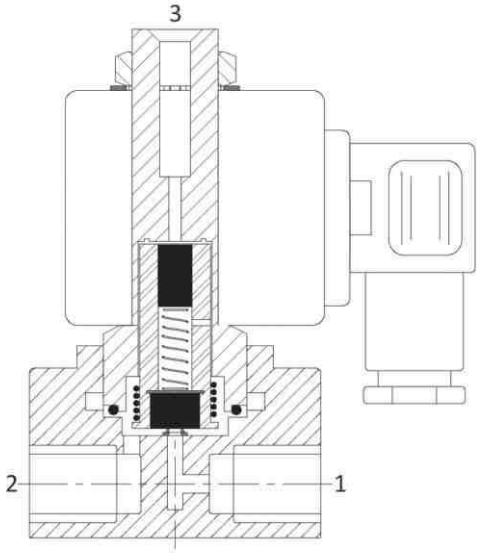

1 - Inlet 2 - Outlet 3 - Exhaust

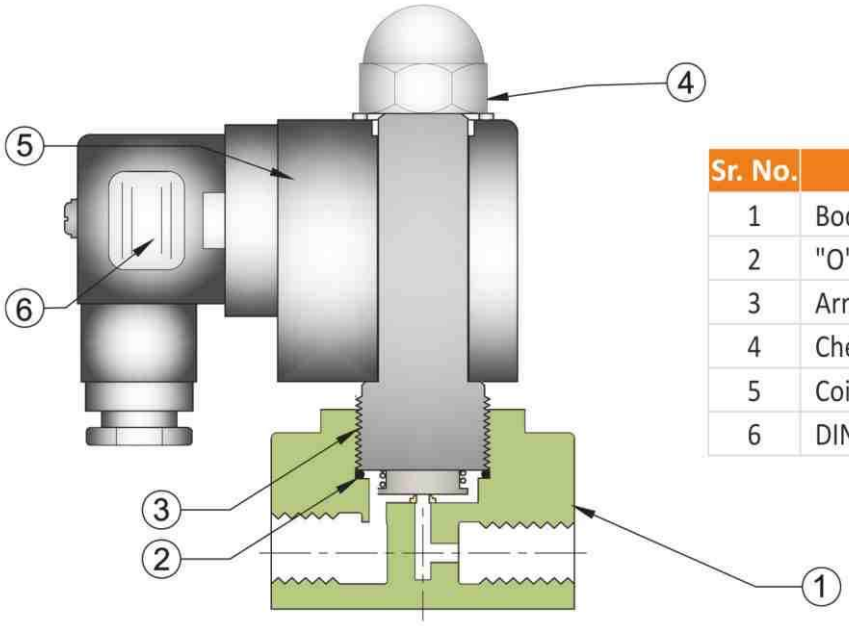

Sr. No.	Description	Material
1	Body	Aluminium Pressure Die Cast
2	"O" - Ring	NBR
3	Armature Assembly	Standard Steel
4	Check Nut	Steel Plated
5	Coil	"F" Class
6	DIN Connector	DIN 43650 A

Pub. on: January, 2015 (Rev.-01)

3/2 Way Namur Direct Acting Solenoid Valve

Catalogue No.
APL / 2044

aira
VALVE AUTOMATION
ISO 9001 CO.

"aira"

Offers 3/2 Way Namur Solenoid Valve open and shuts by given electrical single of AC & DC outputs supply air pressure to valve or changes the output port directions.

Technical Specification		
Item - Type		NAM-SA-32
Coil Voltage		All Std. Voltage Available
Frequency		50 - 60 Hz
Connection Type		1/4"
Conduit		PF 1/2"
Coil Insulation Grade		Class "F"
Ambient	Std.	-20 °C ~ 70 °C (-4 ~ 158 °F)
Temp.	Explosion	-20 °C ~ 50 °C (-4 ~ 122 °F)
Body Material		Aluminium (SS On Request)
Internal Parts		Aluminium / SS
Seals		NBR (Viton On Request)
Working Pressure		Upto 10 BAR

Feature :

- Designed to be Ex d IIC T6 explosion proof grade.
- Easy replacement of coil as both AC and DC type use same enclosure.
- Can test the operation in manual switch without power source.
- High durability as valve body is pneumatic pressure operating type.
- Can be directly mounted on an actuator. (NAMUR Design)
- Ideally Suited for spring return actuator for on / off duty dust cap fitted on exhaust ports.
- Interchangeable of AC and DC Coils
- Manual Over Ride Switch

Weather Proof with DIN Connector

Flame Proof / Explosion Proof Coil with CIMFR Certificate

Weather Proof with Terminal Type Junction Box Coil

3/2 Namur Direct Acting Solenoid Valve Weather Proof with Din Connector Coil

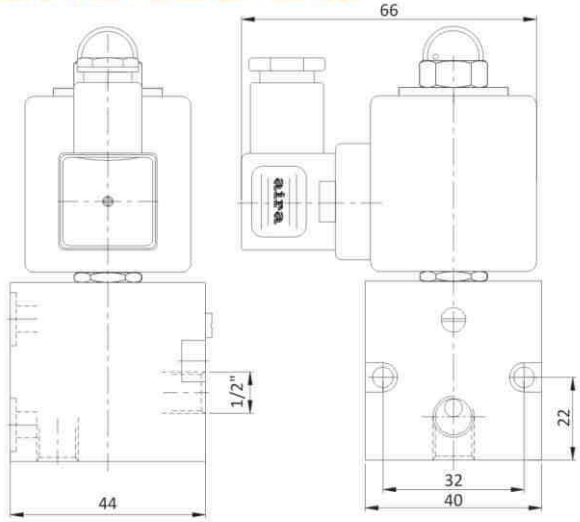

3/2 Namur Direct Acting Solenoid Valve Weather Proof with Terminal Type Junction Box Coil.

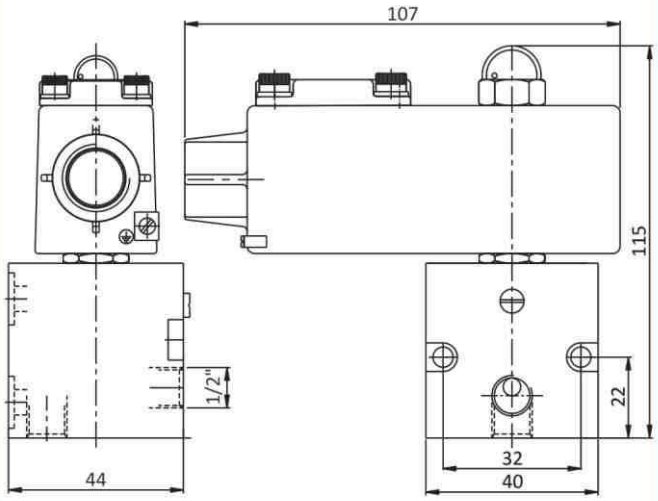

3/2 Namur Direct Acting Solenoid Valve Flame Proof / Explosion Proof Coil with CIMFR Certificate.

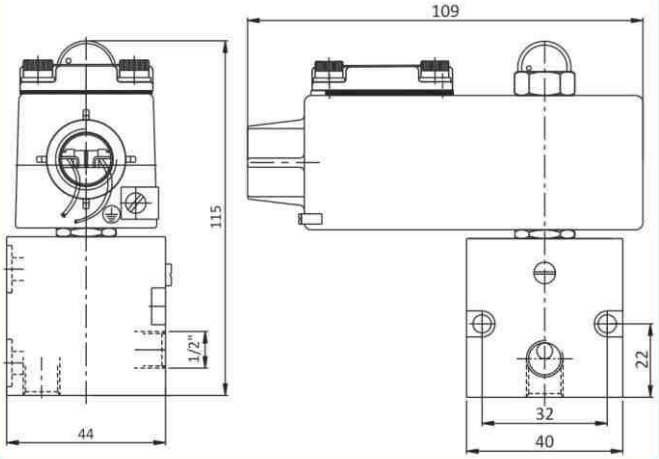

Note : Since, constant worldwide advancement in technology, We keep our rights reserved to make changes time to time in Technical specifications and Dimensions without prior notice.

Pub. on: January, 2015 (Rev.-01)

3/2 & 5/2 Way Convertible Poppet Type Namur Solenoid Valve

Catalogue No.
APL / 2045

aira
VALVE AUTOMATION
ISO 9001 CO.

"aira"

Offers 3/2 & 5/2 Way Convertible Poppet Type Namur Solenoid Valve. Opens and shuts by given electrical signals AC or DC, outputs supply air pressure to valve (Actuator) or changes the output port direction.

Technical Specification			
Item - Type		OTX-PPT-32	OTX-PPT-52
Coil Voltage		All Std. Voltage Available	
Frequency		50 - 60 Hz	
Connection Type		1/4"	
Conduit		PF 1/2"	
Coil Insulation Grade		Class "F"	
Ambient Temp.	Std.	-20 °C ~ 70 °C (-4 ~ 158 °F)	
	Explosion	-20 °C ~ 50 °C (-4 ~ 122 °F)	
Body Material		Aluminium (SS On Request)	
Internal Parts		Aluminium / SS	
Seals		NBR (Viton On Request)	
Working Pressure		Upto 10 BAR	

Feature :

- Designed to be Ex d IIC T6 explosion proof grade.
- Easy replacement of coil as both AC and DC type use same enclosure.
- Can test the operation in manual switch without power source.
- High durability as valve body is pneumatic pressure operating type.
- Can be directly mounted on an actuator. (NAMUR Design)
- Ideally Suited for spring return actuator for on / off duty dust cap fitted on exhaust ports.
- Interchangeable of AC and DC Coils
- Manual Over Ride Switch

3/2 Namur Direct Acting Solenoid Valve Weather Proof with Din Connector Coil

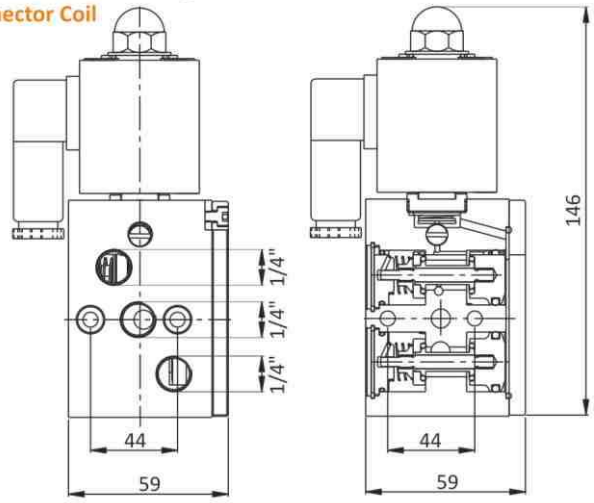

Weather Proof with DIN Connector

Weather Proof with Terminal Type Junction Box Coil

Flame Proof / Explosion Proof Coil with CIMFR Certificate

3/2 Namur Direct Acting Solenoid Valve Weather Proof with Terminal Type Junction Box Coil.

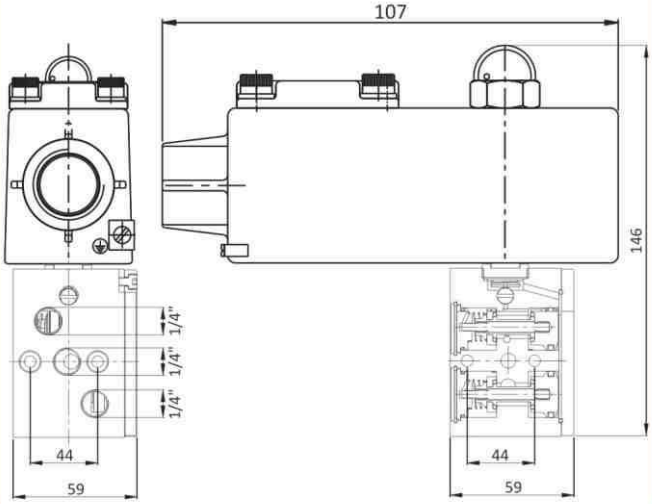

3/2 Namur Direct Acting Solenoid Valve Flame Proof / Explosion Proof Coil with CIMFR Certificate.

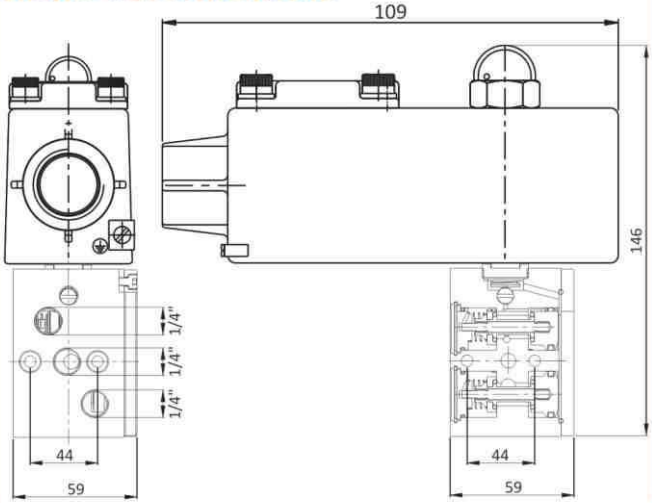

Note : Since, constant worldwide advancement in technology, We keep our rights reserved to make changes time to time in Technical specifications and Dimensions without prior notice.

Pub. on: January, 2015 (Rev.-01)

3/2 & 5/2 Way Convertible Spool Type Single & Double Namur Solenoid Valve

Catalogue No.
APL / 2046

aira
VALVE AUTOMATION
ISO 9001 CO.

"aira"

Offers 3/2 & 5/2 Way Convertible Poppet Type Namur Solenoid Valve. Opens and shuts by given electrical signals AC or DC, outputs supply air pressure to valve (Actuator) or changes the output port direction.

Technical Specification

Item - Type		AMV-NAM-220
Coil Voltage		All Std. Voltage Available
Frequency		50 - 60 Hz
Connection Type		1/4"
Conduit		PF 1/2"
Coil Insulation Grade		Class "F"
Ambient Temp.	Std.	-20 °C ~ 70 °C (-4 ~ 158 °F)
	Explosion	-20 °C ~ 50 °C (-4 ~ 122 °F)
Body Material		Aluminium (SS On Request)
Internal Parts		Aluminium / SS
Seals		NBR (Viton On Request)
Working Pressure		Upto 10 BAR

Feature :

- Designed to be Ex d IIC T6 explosion proof grade.
- Easy replacement of coil as both AC and DC type use same enclosure.
- Can test the operation in manual switch without power source.
- High durability as valve body is pneumatic pressure operating type.
- Can be directly mounted on an actuator. (NAMUR Design)
- Ideally Suited for spring return actuator for on / off duty dust cap fitted on exhaust ports.
- Interchangeable of AC and DC Coils
- Manual Over Ride Switch

Weather Proof with DIN Connector

3/2 Namur Direct Acting Solenoid Valve Weather Proof with Din Connector Coil

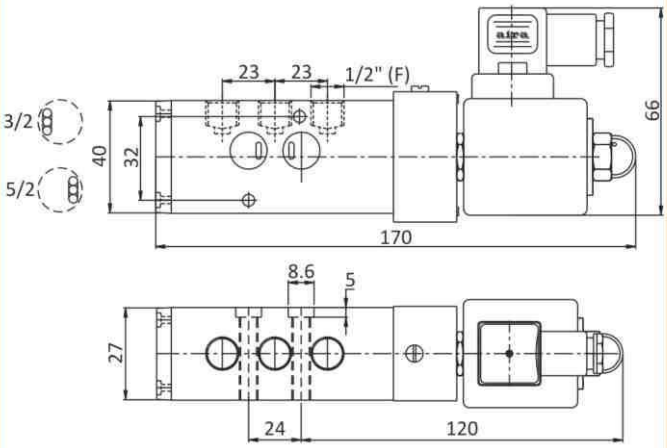

Flame Proof / Explosion Proof Coil with CIMFR Certificate

Weather Proof with Terminal Type Junction Box Coil

3/2 Namur Direct Acting Solenoid Valve Weather Proof with Terminal Type Junction Box Coil.

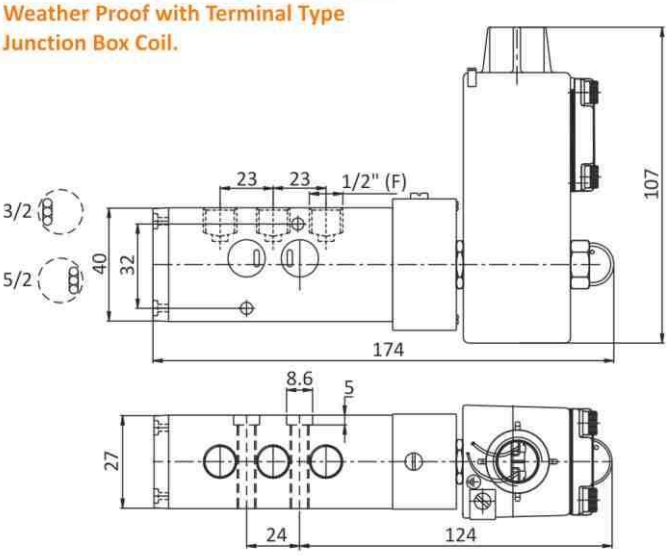

3/2 Namur Direct Acting Solenoid Valve Flame Proof / Explosion Proof Coil with CIMFR Certificate.

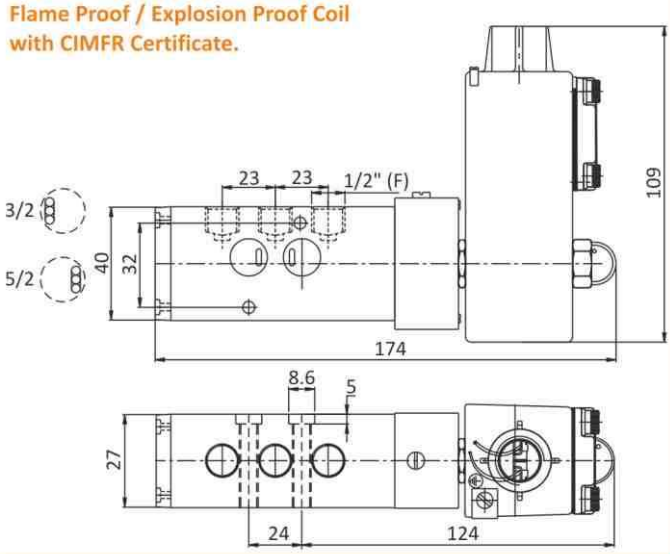

Pub. on: January, 2015 (Rev.-01)

F + R Combination

Catalogue No.
APL / 2047

aira
VALVE AUTOMATION
ISO 9001 CO.

"aira"

Offers Air filter regulator receives main air pressure and supplies to the desirable level to a positioner or other devices.

Feature :

- Maintain desirable pressure level, regardless of fluctuation of pressure input.
- Aluminium body increases versatility of the product in different environments.
- 5 micron filter sorts minuteness particles in the air.
- Relief function is available which discharge to atmosphere if the outlet pressure is higher than setting pressure.

Technical Specification

Item - Model	4FQ	8FQ	FRJ
Air Connection	1/4"		
Max. Supply Pressure	0.5 to 4 Kg/cm^2	0.5 to 8 Kg/cm^2	1 to 9 Kg/cm^2
Gauge Connection	1/8"		
Ambient Temperature	-20° ~ 120° (High Temp.) -40° ~ 120 °C (low Temp.)		
Min Filtering Size	5 Micron		
Material	Aluminium Pressure Die Cast		

(FRJ)

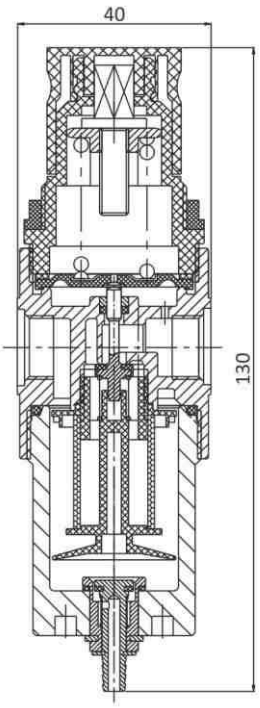

(4FQ / 8FQ)

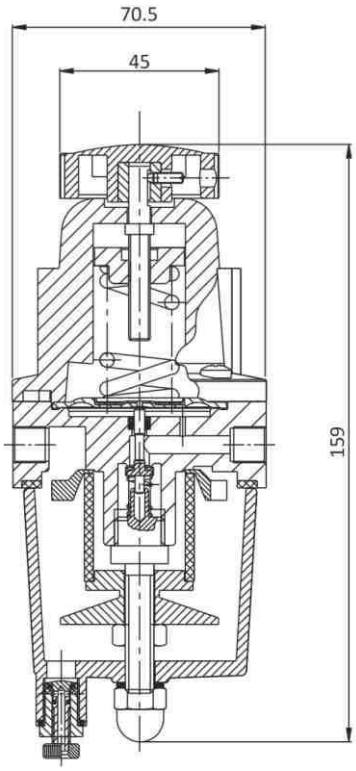

Note : Since, constant worldwide advancement in technology, We keep our rights reserved to make changes time to time in Technical specifications and Dimensions without prior notice.

Pub. on: January, 2015 (Rev.-01)

Air Volume Booster

Catalogue No.
APL / 2048

aira
VALVE AUTOMATION
ISO 9001 CO.

"aira"

Offers Volume booster relay VB-01, VB-02, VB-03 used in pneumatic control valve which receives positioners's output single and supply air pressure actuator for reduce response and adjusting time.

Technical Specification

Valve Model	VB - 01	VB - 02	VB - 03
Max. Supply Pressure	Max. 1Mpa (10 Bar)		
Max. Output Pressure	Max. 0.7Mpa (7 Bar)		
In/Output Connection	1 : 1		
Signal Connection	1/4"	1/2"	3/4"
Linearity	1/4"	1/4"	1/4"
Hysteresis	1%		
ambient Temp.	-20 °C ~ 70 °C (St'nd), -20 °C ~ 120 °C (High), -40 °C ~ 70 °C (Low)		
Material	Aluminium Die Cast	Stainless Steel 304 / 316	

Features :

- Improves speed of valve movement.
- Improves stability with by-pass controls.
- Reacts to sudden change in supply pressure.
- Fixed dead band due to the seal - to seal type of supply and exhaust pressure.

Function :

- Supplies constant air pressure at the rate of 1 : 1.
- By-passing control enhance safety of control valve.
- Responses to slight changes in input signal, which increases accuracy of output of air pressure to actuator.
- Built-in 100 mesh screen filters dusts in the air.

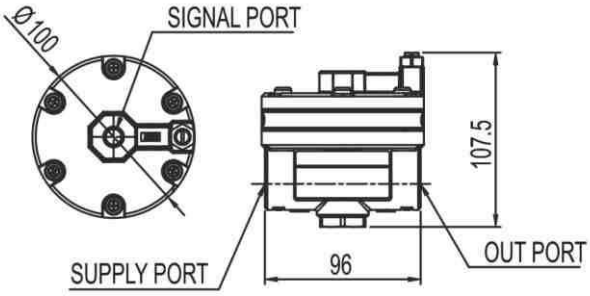

Single & Double Air Lock Valve

Catalogue No.
APL / 2049

(ALV - 11
SLV - 11)

(ALV - 1
SLV - 1)

Technical Specification

Model	ALV - 1	ALV - 11	SLV - 1	SLV - 11
Material	Aluminium Die Cast		Stainless Steel 304 / 316	
Max. Supply Pressure	Max. 10.2 Kg/cm² (142 PSI)			
Max. Single Pressure	Max. 7.1 Kg/cm² (1000 PSI)			
Setting Pressure Range	1.4-7.1 Kg/cm² (20 ~ 100 PSI)			
Flow Capacity (Cv)	0.9			
In/Output Port Connection	PT (NPT) 1/4"			
Signal Port Connection	PT (NPT) 1/4"			
Differential Pressure	Below 0.1 Kg/cm² (1.4 PSI)			
Hysteresis	1%			
ambient Temp.	-20 °C ~ 70 °C			

Features :

- Due to its compact size and light weight, Lock up valve can be installed without bracket.
- It responses to less than 0.1 Kgf/ Pressure cm² Change/s.
- Epoxy powder coating resists against the corrosion.
- 100 mesh screen filters small dust entering.

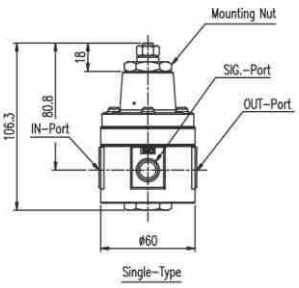

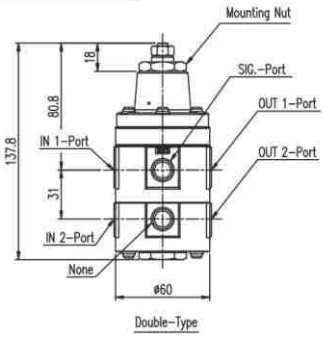

Pub. on: January, 2015 (Rev.-01)

Stainless Steel Triclover End For Hygienic Application

Catalogue No.
APL / 2050

aira
VALVE AUTOMATION
ISO 9001 CO.

Salient Features

- Guaranteed Surface finish ■ Electro-polishing in valve and the T.C. ends ■ Dimensional Accuracy
- No gaps in joints ■ Easy to disassemble

"Airmax" has inhouse facilities for electro-finishing to the valves and T.C. ends Electro-polishing Treatment, which...

- Improve sanitising results and reduces down time. ■ Maximise passivation and improves corrosion resistance. ■ Redduces friction conefficient. ■ Offers longer shelf life.

TC END Connector

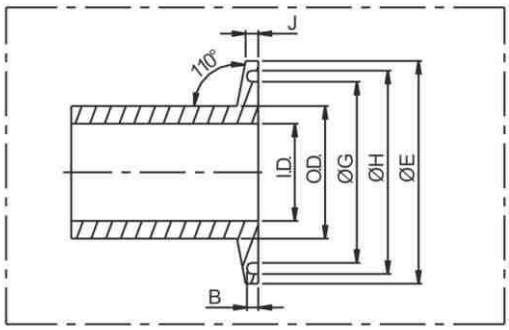

Dimensions : (All dimensions are in MM)

Valve Size		ØE	ØG	ØH	I.D.	O.D.	J	B
MM	Inch							
15	1/2"	34	25.5	29.5	12.5	18.5	2.8	1.5
20	3/4"	34	25.5	29.5	17	23	2.8	1.5
25	1"	50.5	42	46	24	31	2.8	1.5
40	1.1/2"	50.5	42	46	32	41	2.8	1.5
50	2"	64	55.5	59.5	42.5	52.5	2.8	1.5
65	2.1/2"	77.4	68.6	72.6	60.3	70	2.8	1.5
80	3"	90.9	81.3	85.3	73	83	2.8	1.5

Ball Valve

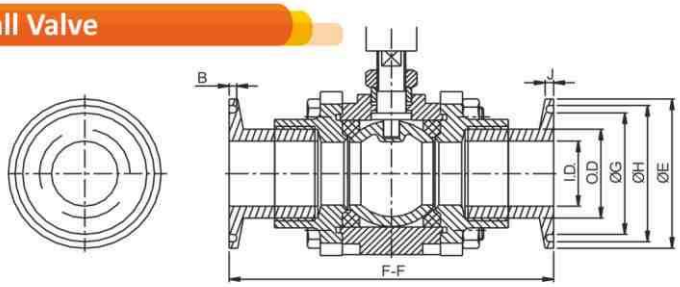

Dimensions : (All Dimensions are in mm)

Valve Size		ØE	ØG	ØH	I.D.	O.D.	J	F-F	B
MM	Inch								
15	1/2"	34	25.5	29.5	12.5	18.5	2.8	81	1.5
20	3/4"	34	25.5	29.5	17	23	2.8	86.7	1.5
25	1"	50.5	42	46	24	31	2.8	88.5	1.5
40	1.1/2"	50.5	42	46	32	41	2.8	106.5	1.5
50	2"	64	55.5	59.5	42.5	52.5	2.8	134.6	1.5
65	2.1/2"	77.4	68.6	72.6	60.3	70	2.8	187	1.5
80	3"	90.9	81.3	85.5	73	83	2.8	187	1.5

ISD / GSD / STEAM Solenoid Valve

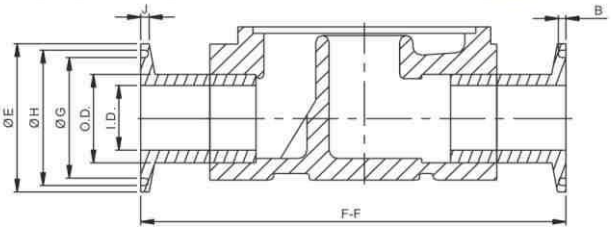

Dimensions : (All Dimensions are in mm)

Valve Size		ØE	ØG	ØH	I.D.	O.D.	J	F-F	B
MM	Inch								
15	1/2"	34	25.5	29.5	12.5	18.5	2.8	95	1.5
20	3/4"	34	25.5	29.5	17	23	2.8	110	1.5
25	1"	50.5	42	46	24	31	2.8	125	1.5
40	1.1/2"	50.5	42	46	32	41	2.8	150	1.5
50	2"	64	55.5	59.5	42.5	52.5	2.8	165	1.5

Pub. on: January, 2015 (Rev.-01)

Conversion Factors

aira
VALVE AUTOMATION
ISO 9001 CO.

The following table gives conversions of Imperial and discountinued Metric units in to preferred SI units and others acceptable units. For most practical the approcimate conversion will prove adequate but for more critical use the second set of conversion factors should be used.

Form Old Unit	To SI Unit	Approximate conversion	Accuracy	Conversion for greater accurcy
Pressure				
lbf/in² (psig)	bar	x7then÷100	1.5%	÷14.5
lbf/in² (psig)	N/m²	x7000	1.5%	x6895
lbf/in² (psig)	kilopsacal (kpa)	x7	1.5%	x6.9
lbf/in² (psig)	megapascal (Mpa)	x7 then÷1000	1.5%	x6.9 then÷1000
KGf/cm² or kp/cm²)	bar	x1	2.0%	x0.98
KGf/cm² or kp/cm²)	N/m²	x100000	2.0%	x98070
KGf/cm² or kp/cm²)	kilopsacal(kpa)	x100	2.0%	x98
KGf/cm² or kp/cm²)	megapascal (Mpa)	÷10	2.0%	x0.98
Atmosphere (Standard)	bar	x1	1.3%	x1.013
Atmosphere (Standard)	N/m²	x100000	1.3%	x101300
Atmosphere (Standard)	kilopsacal(kpa)	x100	1.3%	x101.3
Atmosphere (Standard)	megapascal (Mpa)	÷10	1.3%	x0.101
Inches Water Gauge (in H O)	milibar (mbar)	x10 then÷4	0.6%	x2.49
Milimeters Water Gauge (mm H O)	milibar (mbar)	x10	2.0%	x0.098
Milimeters of Mercury (mm Hg)	milibar (mbar)	x9 then÷7	0.04%	x1.33
Torr	milibar (mbar)	x9 then÷7	0.04%	x1.33
Tons/in²	bar	x1000 then÷7	7.5%	x154
Tons/ft²	bar	x1	1.5%	X1.07
*Also known as a 'technical' atmosphere				
Flow				
Cubic feet per minute (cfm)	Cubic Decimeters/second (dm³/s)	÷2	5.9%	x4.472
Cubic feet per minute (cfm)	Cubic meters/second (m³/s)	÷2 then 1000	5.9%	x0.472 then÷1000
Cubic feet per hour	Cubic decimeters/second (dm³/s)	x8 then 1000	1.7%	x7.9 then÷1000
Litres/minute (L/m)	Cubic decimeters/second (dm³/s)	x2 then 100	20%	÷60
Cubic metres/hour (m³/h)	Cubic decimeters/second (dm³/s)	÷4	10%	x0.28
*The litre is equal to 1 cubic decimetre (dm³) within 28 parts per million and for ÷ most practical purpose can be considered to be the same. For more precise work, increase the volume in litres by 1 part in 36000 to find the volume in dm³.				
Force (Weight)				
Pound - force (ibf)	newtone (N)	x4	10%	x9 then÷2
Kilopound (kp)	newtone (N)	x10	2%	x9.8
Torque				
Pound - force foot (lbf ft)	newtone-metre (N m)	x3 then÷2	10%	x1.36
Pound - force inches (lbf ft)	newtone-metre (N m)	÷10%	11%	x0.11
Length				
Inch (in)	milimetres (mm)	÷4 then x100	1.6%	x25.4
Foot (ft)	meter (m)	÷3 then x10	1.6%	x0.305
Yard (yd)	meter (m)	x1	9%	x12 then÷13
n/16 inch	milimeters (mm)	'n'x3 then÷2	5.5%	x1.6
n/1000 inch	milimeters (mm)	'n'÷4 then÷10	1.6%	x0.0254
Mile (ml)	kilometer (km)	x1.5	6.8%	x1.609
Mass				
Pound (lb)	kilogramme (mm)	÷2	10%	x0.45
Pound (lb)	gramme (g)	x1000 then÷2	10%	x454
Ounce (oz)	gramme (g)	x30	6%	x28.4
Long Ton (UK)	Tonne (t)	x1	1.6%	x1.02
Short Ton (USA)	tonne (t)	x9 then÷10	0.8%	x0.91
Power				
Horsepower (hp)	watt (W)	x3 then÷4 thenx1000	0.6%	x746
Horsepower (hp)	kilowatt (kw)	x3 then÷4	0.6%	x0.746
Energy, Work				
Foot-pound-force (ft.lbf)	Joule (J)	x9 then÷7	5.5%	x1.35
Kilogramme-force metres (kgf. m)	Joule (J)	x10	1.3%	x9.807
Britis thermal unit (Btu)	Joule (J)	x1000	5.5%	x1055
Volume				
Gallon (UK) (gal)	litre (L)	x5	10%	x4.54
Gallon (UK) (gal)	litre (L)	x4	5.7%	x3.79
Pint (UK) (pt)	litre (L)	x6 then÷10	5.6%	x0.57
Pint (USA) (pt)	litre (L)	÷2	5.7%	x0.47
Fluid ounce (UK) (fl oz)	Cubic centimetre (cm³)	x30	5.6%	x28.4
Fluid ounce (UK) (fl oz)	Cubic centimeter (cm³)	x30	1.4%	x29.6
Temperature				
Fahrenheit (°F)	Celsius (°C)	÷32 then÷2	10% between 0°F and 400°F	+40 then x 5 then ÷9 then ÷40 then

Pub. on: January, 2015 (Rev.-01)

Material Selection & Properties Chart

VALVE AUTOMATION ISO 9001 CO.

Chemical And Physical Properties Of Material Used

STANDARD				GENERAL NAME	CHEMICAL PROPERTIES (%) - Max. unless Specified										PHYSICAL PROPERTIES		
AMERICAN	GRADE	INDIAN	GRADE		C	Mn	P	S	SI	Cr	NI	Mo	Cu	V	T.S.Mpa	Y.S.Mpa	ELONGATION%
ASTM-A216	CIB	I.S.-210	FG-200	CAST IRON	3.50	0.60 TO 0.90	0.400	0.080	1.20 TO 1.80	0.15	-	-	0.10	-	200	230	-
ASTM-A536	60-40-18	I.S.-1865	SG-60	S.G.IRON	3.00	0.70 TO 1.50	0.080	-	1.00 TO 2.80	1.00 TO 2.50	18.0 TO 22.0	-	-	-	600	370	2
ASTM-A216	WCB	I.S.-2856	GR-2	CARBON STEEL	0.30	1.00	0.04	0.045	0.60	0.50	0.50	0.20	0.30	0.30	485-655	250	22
ASTM-A351	CF8	I.S.-7806	GR-3	S.S.304	0.08	1.50	0.04	0.04	2.00	18.00 TO 21.00	8.00 TO 21.00	0.50	-	-	485	205	35
ASTM-A351	CF8M	I.S.-7806	GR-3	S.S.316	0.08	1.50	0.04	0.04	1.50	18.00 TO 21.00	9.00 TO 21.00	2.00 TO 3.00	-	-	485	205	30
ASTM-A217	WC6	I.S.-3038	GR-4	CAST ALLOY STEEL	-	-	-	-	-	1.00	0.40	0.50	-	-	480	280	17

Valve Body Materials

Rating	General Name	Specifications & Grade
ANSI B16.5 Class 150 PN-10	Cast Iron	ASTM A 126 Gr. CIB I.S. 210 Gr. F.G. 200, DIN, 0.6025 (GG.25)
ANSI B16.5 Class 300 PN-16	Stainless Steel	ASTM A 351 Gr. CF8, I.S. 7806 Gr. 3 DIN, 1.4410 (G-X10CRNIMO 189)
ANSI B16.5 300 PN-25	SG Iron	ASTM A 536 Gr. 60-40-18, Class, I.S. 1865 Gr. S.G. 600/3 DIN 0.7043 (GGG-40-3)
ANSI B16.5 Class	Cast Iron	ASTM A 216 Gr. WCB, I.S. 2856 DIN 1.0619 (GS-C25)
150, 300, 600	Stainless Steel	ASTM A 351 Gr. CF8M, I.S. 7806 Gr.3 DIN 1.4410 (G-X 5CRNIMO 189)
PN-16, PN-40	Cast Alloy Steel	ASTM A 217 Gr, WCB, I.S. - 3038 Gr-4 DIN 1.7357 (GS-17 CRMO.55)

Pub. on: January, 2015 (Rev.-01)

Material Selection Chart

aira
VALVE AUTOMATION
ISO 9001 CO.

COMPATIBILITY CHART

CHEMICALS	A 126 CIB CAST IRON	A 126 WCB CARBON STEEL	A 351 CF8 SS304	A 351 CF8M SS316	A 217 WC6 CAST ALLOY STEEL	POLY PROPYLENE
ACETIC ACID	N	N	C	C	Y	Y
ACETALDEHYDE	Y	Y	Y	Y	-	Y
ACETONE	Y	Y	Y	Y	Y	Y
AMMONIA	Y	Y	Y	Y	Y	Y
AMMONIUM HYDROXIDE	-	N	Y	Y	-	Y
AMMONIUM NITRATE	N	Y	Y	Y	Y	Y
ASPHALT	Y	Y	Y	Y	Y	Y
BEER	C	C	Y	Y	Y	Y
BENZENE (BENZOL)	Y	Y	Y	Y	Y	N
BORIC ACID	N	N	Y	Y	Y	Y
BUTTER MILK	-	N	Y	Y	-	N
CARBONIC ACID	C	C	C	C	-	N
CARBON DIOXIDE	Y	Y	Y	Y	Y	Y
(DRY & WET)						
CHLORINE (DRY)	-	Y	Y	C	C	N
CHLOROFORM	-	Y	Y	Y	-	N
COALTAR	Y	C	Y	Y	Y	N
COTTONSEED OIL	-	Y	C	Y	-	Y
COPPER NITRATE	Y	N	Y	C	Y	Y
ETHANE	Y	Y	Y	Y	Y	N
ETHER	C	C	Y	Y	Y	N
ETHYLENE	Y	Y	Y	Y	Y	N
ETHYLCHLORIDE	N	N	Y	Y	-	N
FISH OIL	-	C	C	Y	Y	N
FORMALDEHYDE	C	C	Y	C	-	Y
FUEL OIL	-	C	Y	Y	Y	N
FURFURAL	Y	Y	C	Y	C	N
FORMIC ACID	N	N	Y	Y	C	C
FRUIT JUICES	-	C	Y	Y	-	N
GASOLINE (REFINED)	Y	Y	Y	Y	Y	N
GLUCOSE	Y	Y	Y	Y	Y	Y
GLYCERINE	-	C	N	Y	-	Y
HYDROFLUORIC ACID	N	C	Y	C	C	Y
HYDROGEN GAS	Y	Y	C	Y	Y	Y
HYDROGEN FLUORIDE	-	C	C	C	-	N
HYDROGEN PEROXIDE	Y	N	Y	Y	-	C

CHEMICALS	A 126 CIB CAST IRON	A 126 WCB CARBON STEEL	A 351 CF8 SS304	A 351 CF8M SS316	A 217 WC6 CAST ALLOY STEEL	POLY PROPYLENE
HYDROGEN SULFIDE	N	N	Y	Y	Y	Y
INDOFORM	-	N	Y	Y	-	N
KEROSENE	-	Y	Y	Y	-	Y
LACTIC ACID	-	N	Y	Y	-	Y
LITHIUM	-	C	Y	Y	-	N
MAGNESIUM HYDROXIDE	Y	Y	Y	Y	Y	Y
MAGNESIUM SULFATE	-	C	Y	C	-	Y
METHYL CHLORIDE	-	N	Y	C	-	-
MILK	N	N	Y	Y	Y	N
MERCURY	Y	Y	Y	Y	Y	Y
METHANOL	Y	Y	Y	Y	Y	Y
NATURAL GAS	Y	Y	Y	Y	Y	Y
NITRIC ACID	N	N	Y	C	N	Y
OLEIC ACID	N	N	Y	Y	Y	Y
OXYGEN	Y	Y	Y	Y	Y	N
PARAFFIN	-	Y	Y	Y	-	C
PETROLEUM OILS	Y	Y	Y	Y	Y	N
POTASSIUM CHLORIDE	C	C	Y	Y	-	Y
PHOSPHORIC ACID	N	N	Y	Y	-	Y
PICRIC ACID	N	N	Y	Y	-	Y
POTASSIUM HYDROXIDE	C	C	Y	Y	-	Y
PROPANE GAS	Y	Y	Y	Y	Y	C
SILVER NITRATE	N	N	Y	Y	C	Y
SOAP	-	C	C	C	-	Y
SODIUM ACETATE	Y	Y	C	Y	Y	Y
SODIUM CARBONATE	Y	Y	Y	Y	Y	Y
SODIUM CYANIDE	-	C	C	C	-	Y
SODIUM HYDROXIDE	Y	Y	Y	Y	Y	Y
SODIUM NITRATE	-	C	Y	Y	-	Y
SULFUR	Y	Y	Y	Y	Y	N
STEAM	-	Y	Y	Y	-	N
SULFUR DIOXIDE	Y	C	Y	Y	Y	Y
TAR	Y	Y	Y	Y	Y	N
TURPENTINE	C	C	Y	Y	Y	N
VEGETABLE OIL	-	N	C	C	-	C
WATER	-	Y	Y	Y	-	Y
WHISKEY AND WINES	N	N	Y	Y	Y	Y
ZINC SULFATE	N	N	Y	Y	Y	Y

Y - Can be used | **C - Try with caution** | **N - Not recommended**

The Table above are purely recommendation only. We do not guarantee the Performance.

Pub. on: January, 2015 (Rev.-01)

Material Specification

VALVE AUTOMATION
ISO 9001 CO.

Temperature Table For Saturated Steam Under Gauge Pressure

Pressure (bar)	Temp (°C)	Pressure (bar)	Temp (°C)
0.5	111	6	165
1	120	7	170
1.5	127	8	175
2	134	9	180
2.5	139	10	184
3	144	11	188
3	148	12	191
4	152	13	195
4.5	155	14	198
5	159	15	200

Plug and Seat Materials

Plug Type		Valve Seat	Plug and Plug Spindle
Parabolic	Equal percentage linear	S.S.AISI-304 S.S.AISI-316 I.S 6603 DIN.-1.4308	S.S.AISI-304 S.S.AISI-316 I.S 6603 DIN.-1.4308
Flat	On-off	S.S.AISI-304 S.S.AISI-316 I.S 6603 DIN.-1.4308	S.S.AISI-304 S.S.AISI-316 I.S 6603 DIN.-1.4308
Three-way	Linear, On-Off	S.S.AISI-304 S.S.AISI-316 I.S 6603 DIN.-1.4308	S.S.AISI-304 S.S.AISI-316 I.S 6603 DIN.-1.4308

Rating	Valve Body Material	Maximum									
ANSI B 16.5		120°C	200°C	250°C	300°C	350°C	400°C	425°C	450°C	475°C	500°C
Class 150	Cast Iron	16	13	11	10						
300 PN-10 PN-16	Stainless Steel	16	13	11	10						
Class 300 PN-25	S.G. Iron	25	20	18	16	12					
Class	Cast Steel	40	35	32	28	24	21				
150 300 600	Stainless Steel	40	35	32	28						
PN-16 PN-40	Cast Alloy Steel	40	40	40	40	38	36	35	34	33	29

Note : Since, constant worldwide advancement in technology, We keep our rights reserved to make changes time to time in Technical specifications and Dimensions without prior notice.

Pub. on: January, 2015 (Rev.-01)

Installation and Maintenance

aira
VALVE AUTOMATION
ISO 9001 CO.

Applications

Duty : 1. Stopping & Starting flow. 2. Moderate Throtting. 3. Flow Diversion.
Caution : These valves are not recommended for Flow Control purposes.
Service : 1. Gases. 2. Liquids. 3. Non-Abrasive slurries. 4. Vacuum. 5. Cryogenic.

Installation

Please adhere to the below mentioned instructions prior and during installation

1. Check to ensure that the i) Size ii) Pressure Rating iii) Material of construction iv) End connection are suitable for the service condition of your application.
2. Remove all end protectors and covers provided, except those provided on the Handles and Levers.
3. Blow air to clean any grit and dirt which may have entered the valve during storage. Caution: Non compliance will result in damage to the critical components in the valve.
4. Pipeline strainers should be provided upstream to prevent any abrasive particles from entering the valve and damaging the seat.
5. Do not subject the valve to line distortion stress by ensuring that flat flanges and pipeline are square and true. The pipes should be properly supported to prevent line buckling under the weight of the valve (especially in larger size valves).
6. All the PTFE soft seats should be removed prior to welding any valve onto the pipeline. Proper re-fitment should be carried out at site by competent engineers. Caution : Heat generated by welding may damage PTFE. (This point is not valid in Fire-Tested valves).
7. Slag splatter should be removed from the pipeline. Extreme Caution : Slag splatter is extremely detrimental to the critical components of the valve, and is the chief cause for failure of valves on new pipelines.
8. Although all valves are tested prior to despatch, it is possible that some minor adjustments are required, especially in the Gland, when the valve is on stream.

Maintenance

Regular maintenance is the most efficient means of ensuring continued operational efficiency. Regular scheduled inspections of all valves is essential, especially those valves which are operated occasionally, such as isolation and emergency valves. Caution : We will not be responsible for any jamming and dis-satisfactory performance of our valves due to extended periods of disuse.

1. All gland packing should be checked to see if pressure seal is being maintained, replace/add where necessary.
2. All discs/balls/seatings should be examined to ascertain the exact extent of wear and damage. If necessary, either replace on site or refer to our Service Department.
3. Cover and flange gaskets should be inspected and replaced where necessary.
4. Handles/Levers should be re-aligned, and care should be taken to ensure that the valve closes fully.
5. All nuts/bolts should be appropriately tightened and the condition of the threads on them should be checked.
6. All soft components should be replaced routinely, and compulsorily after 2000 operations.

Trouble Shooting & Remedies To Common Problems

PROBLEM	REMEDY
Leakage from Gland/Bonnet	Appropriate tightening of Gland Nuts/ / Bolts and Stem Nuts. Alternatively : Replace Gland Packing.
Leakage from Seat	Appropriate tightening of Body Bolts / Nuts. Alternatively : Replace Seat / Ball Seal.
Leakage from Connector Seal	Appropriate tightening of Body Bolts / Nuts. Alternatively : Replace Connector Seal.

Pub. on: January, 2015 (Rev.-01)

aira
VALVE AUTOMATION
ISO 9001 CO.

Clients

- IndianOil
- Reliance Industries Limited
- ONGC
- HINDALCO
- Vedanta
- VOLTAS
- NTPC
- GAIL
- HP
- BHEL
- IFFCO
- BARC
- THERMAX
- ESSAR
- Godrej
- GUJARAT STATE FERTILIZERS & CHEMICALS LTD. Integrated Management System Certified Company

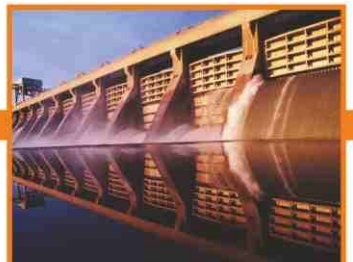

IBR

www.airaindia.com / www.airaeuro.com